# AMT-1B

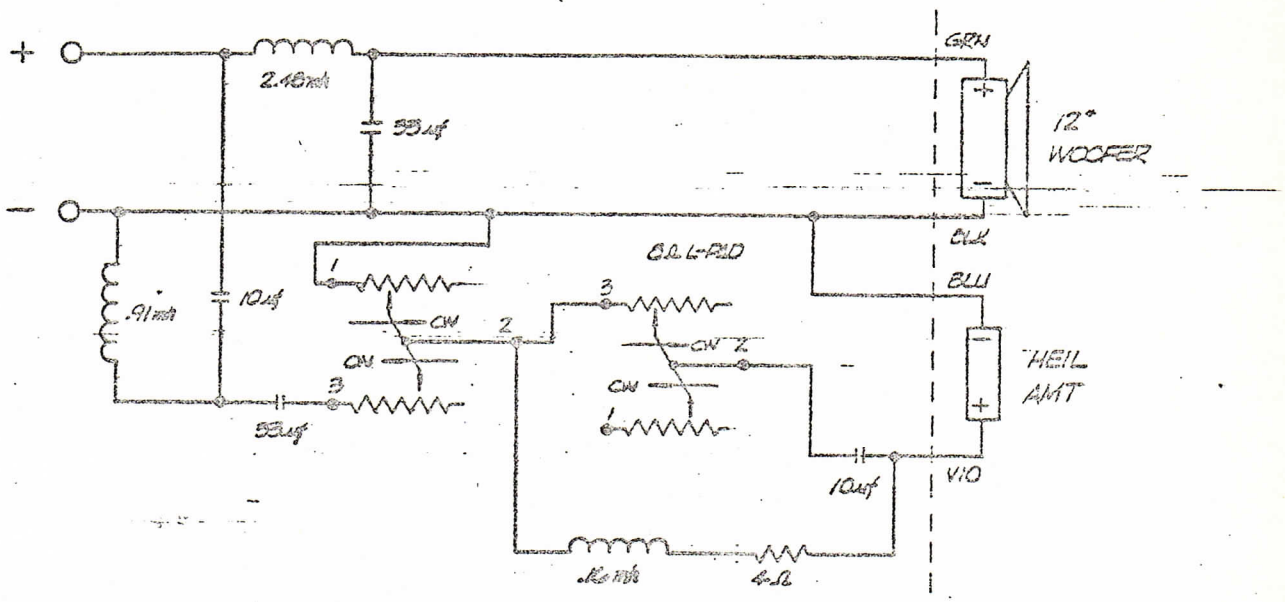


SCHEMATIC

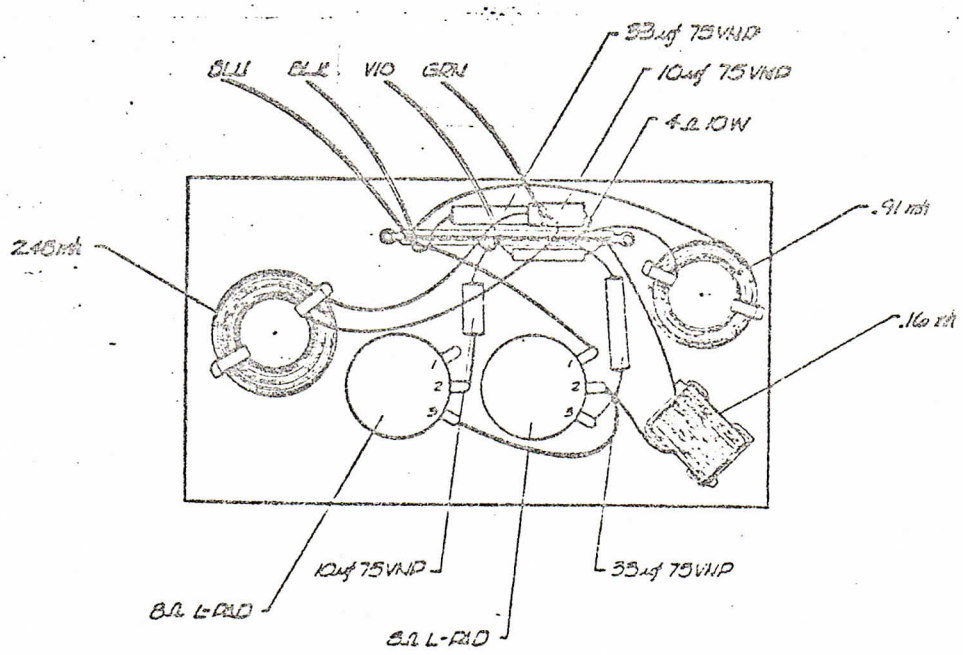


PICTORIAL

# AMT-MONITOR

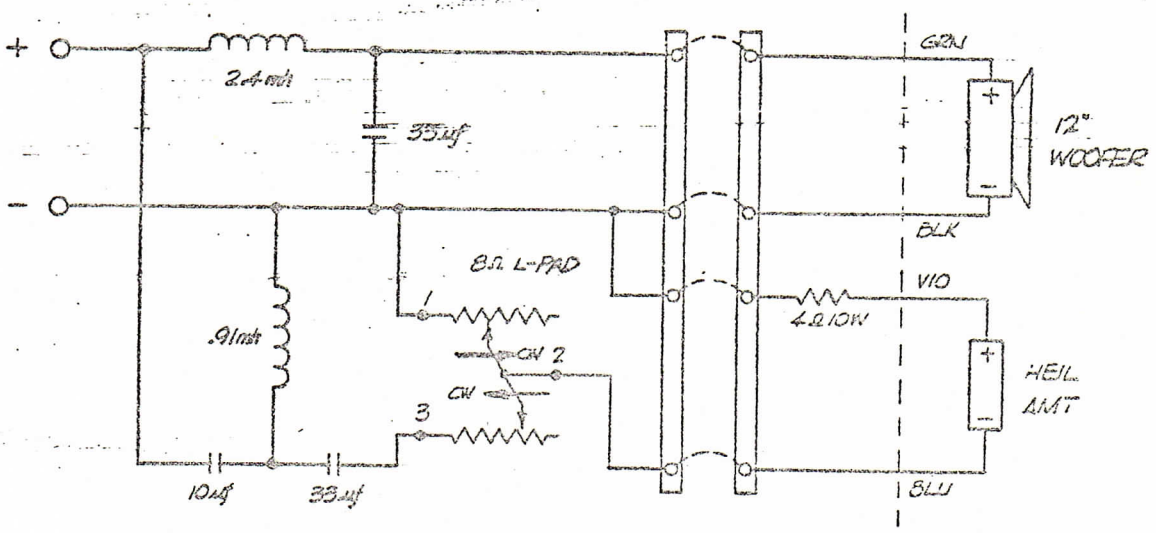


SCHEMATIC

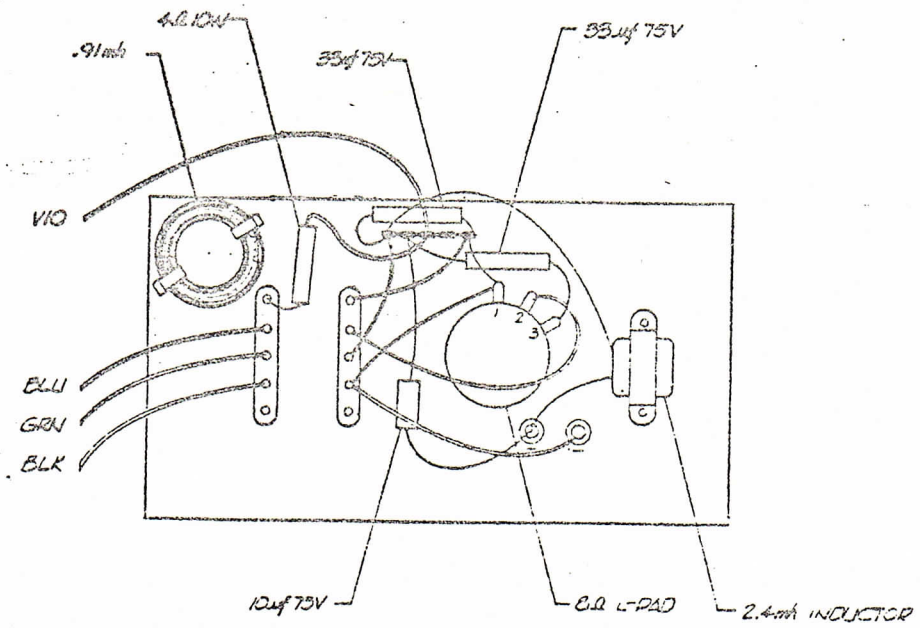


PICTORIAL

# AMT-1B BOOKSHELF

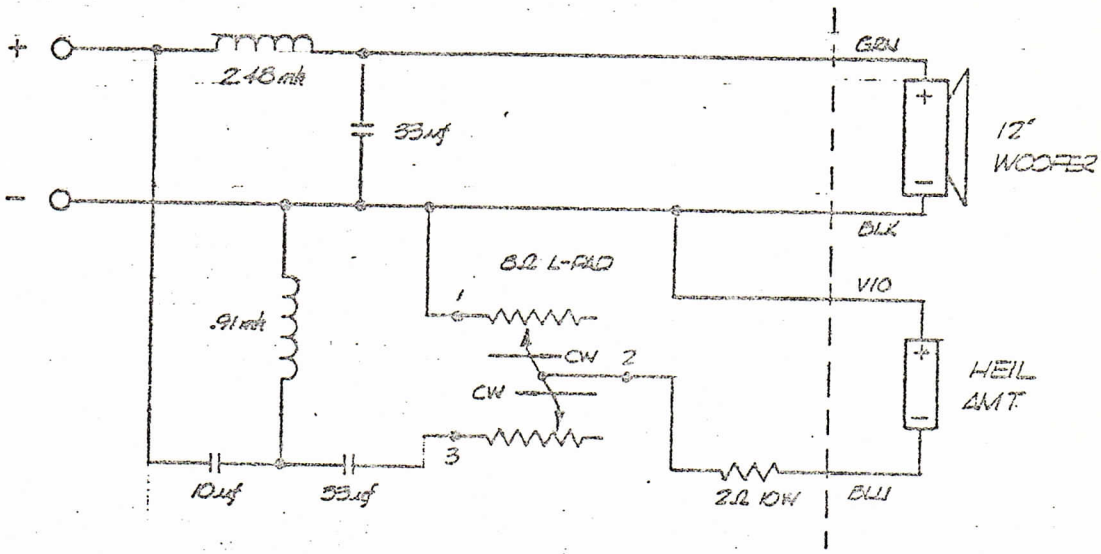


SCHEMATIC

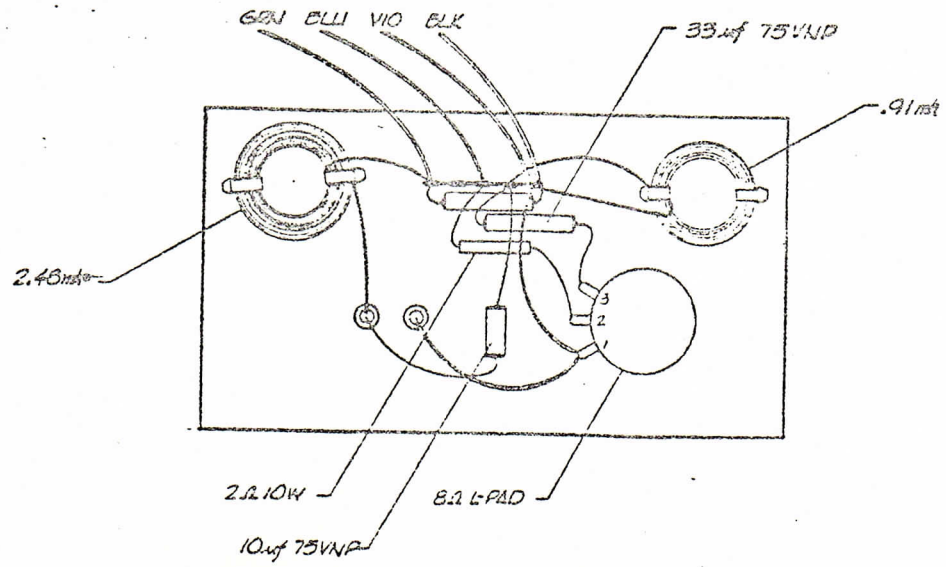

NEW!

AMT-10B

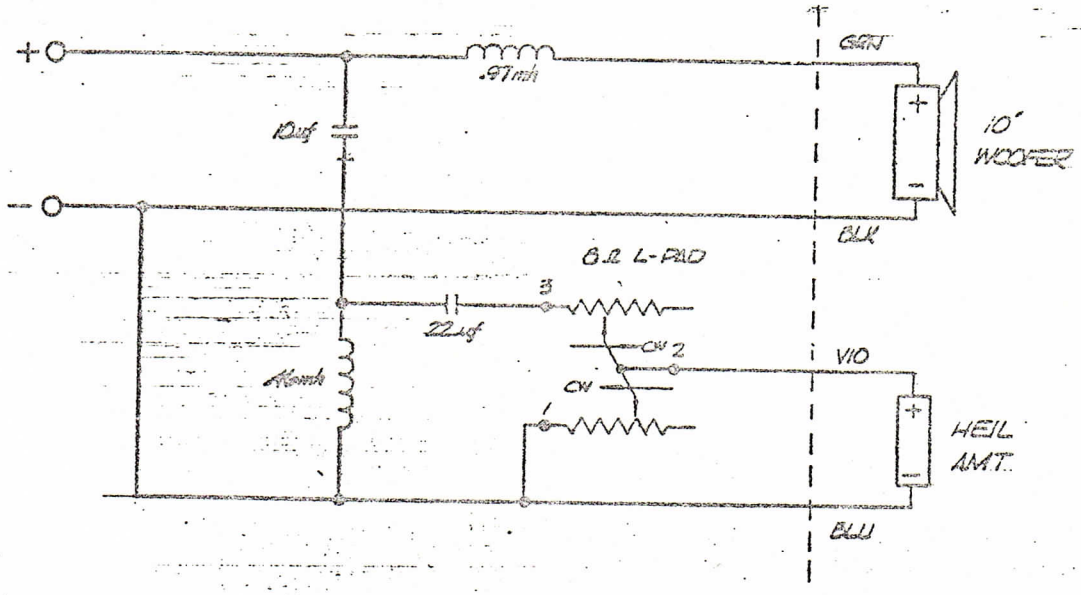


SCHEMATIC

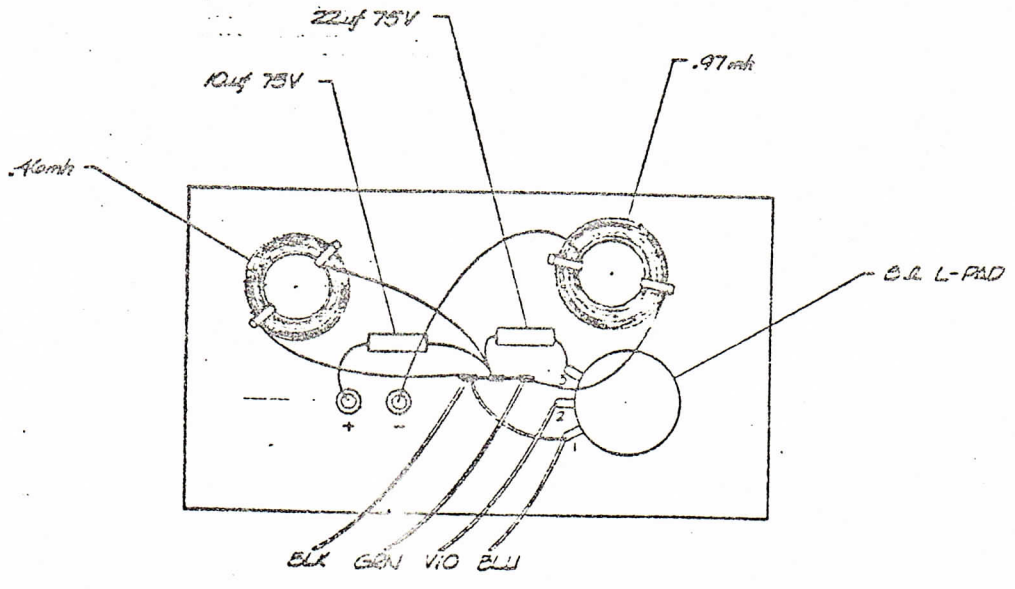


E

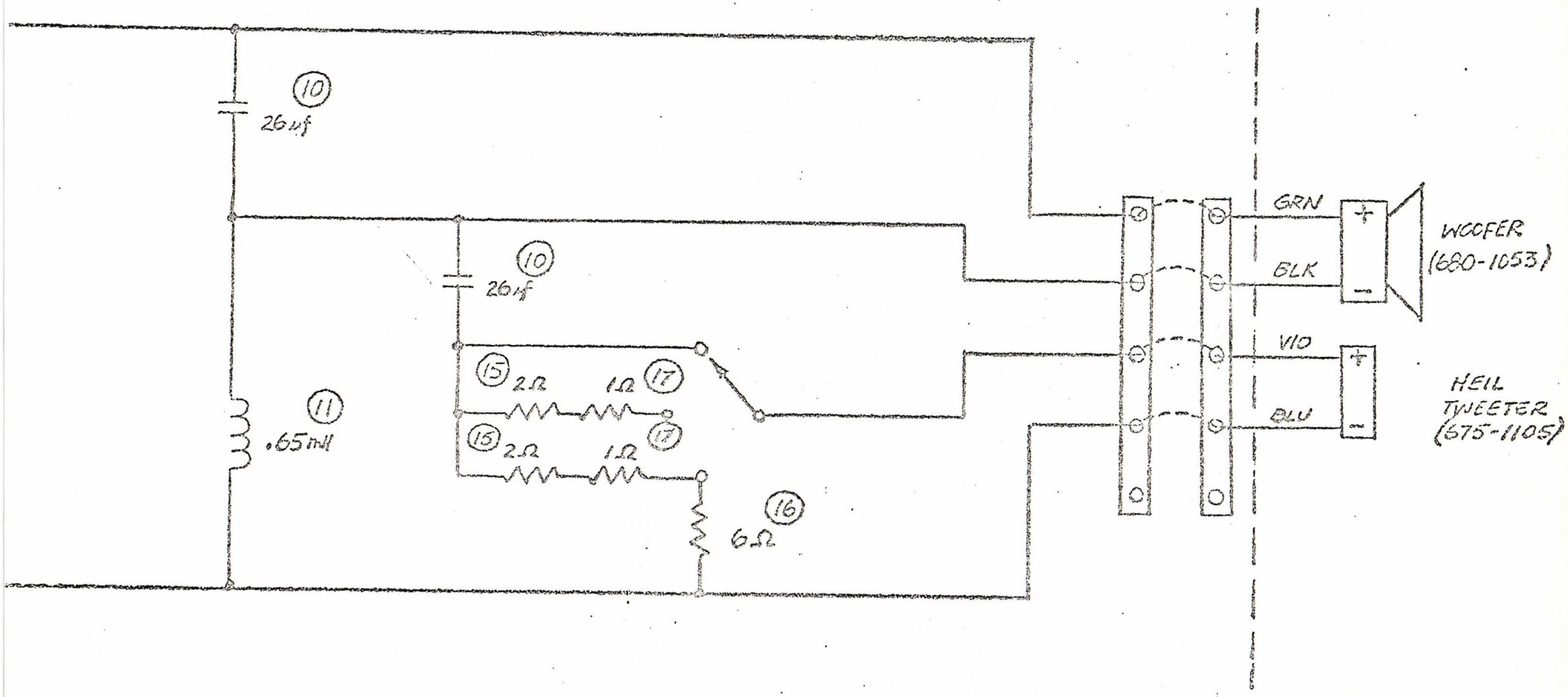
10
26 µf
10
26 µf
15
2Ω
1Ω
17
15
2Ω
1Ω
17
11
.65 mH
16
6Ω
GRN
BLK
WOOFER
(680-1053)
VIO
BLU
HEIL
TWEETER
(675-1105)

DISCO

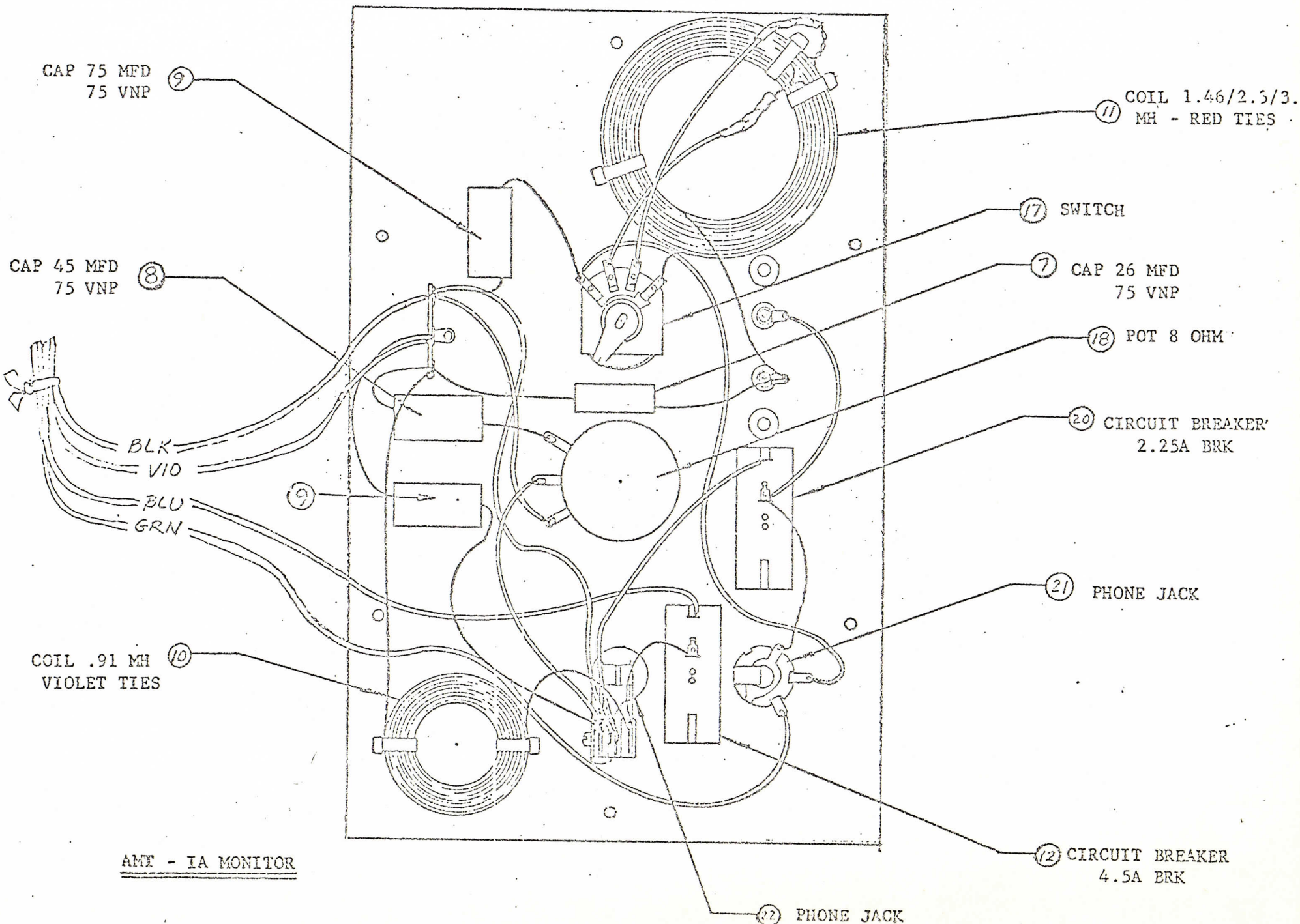


AMT - IA MONITOR

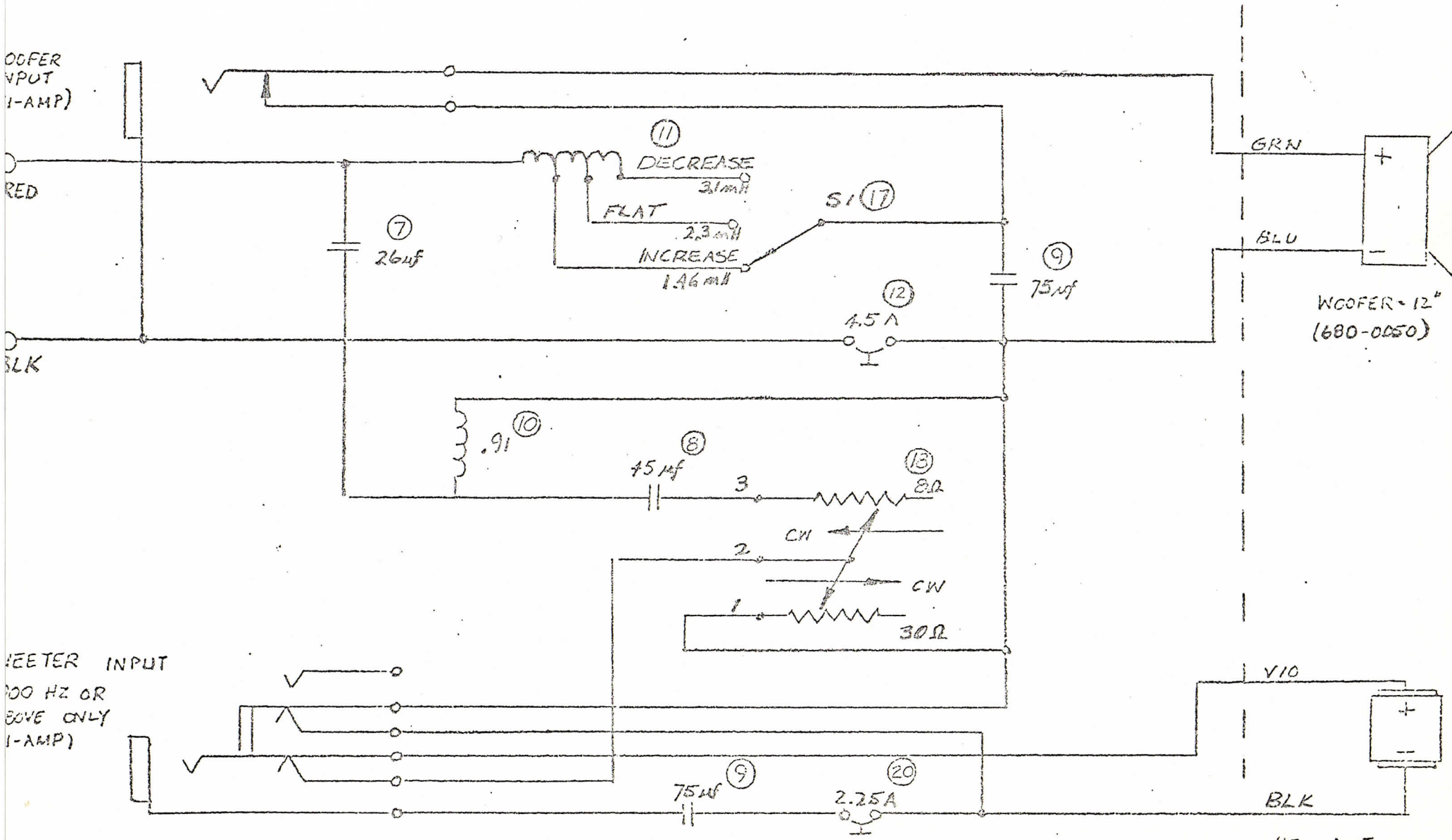


AMT - IA MONITOR

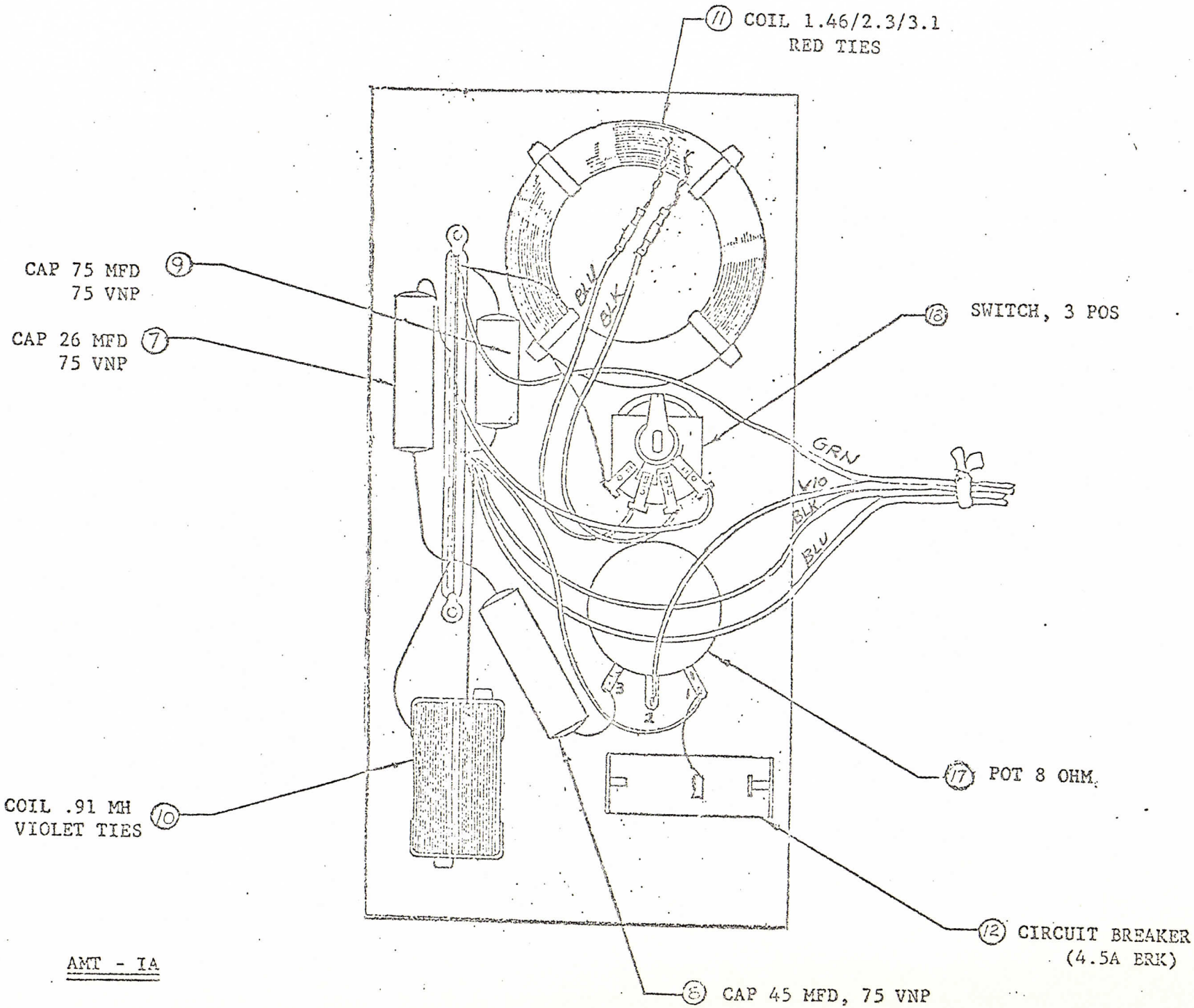
(11) COIL 1.46/2.3/3.1
RED TIES
CAP 75 MFD
75 VNP (9)
CAP 26 MFD (7)
75 VNP
(18) SWITCH, 3 POS
BLU
BLK
GRN
VIO
BLK
BLU
COIL .91 MH
VIOLET TIES (10)
(17) POT 8 OHM
(12) CIRCUIT BREAKER
(4.5A BRK)
(8) CAP 45 MFD, 75 VNP

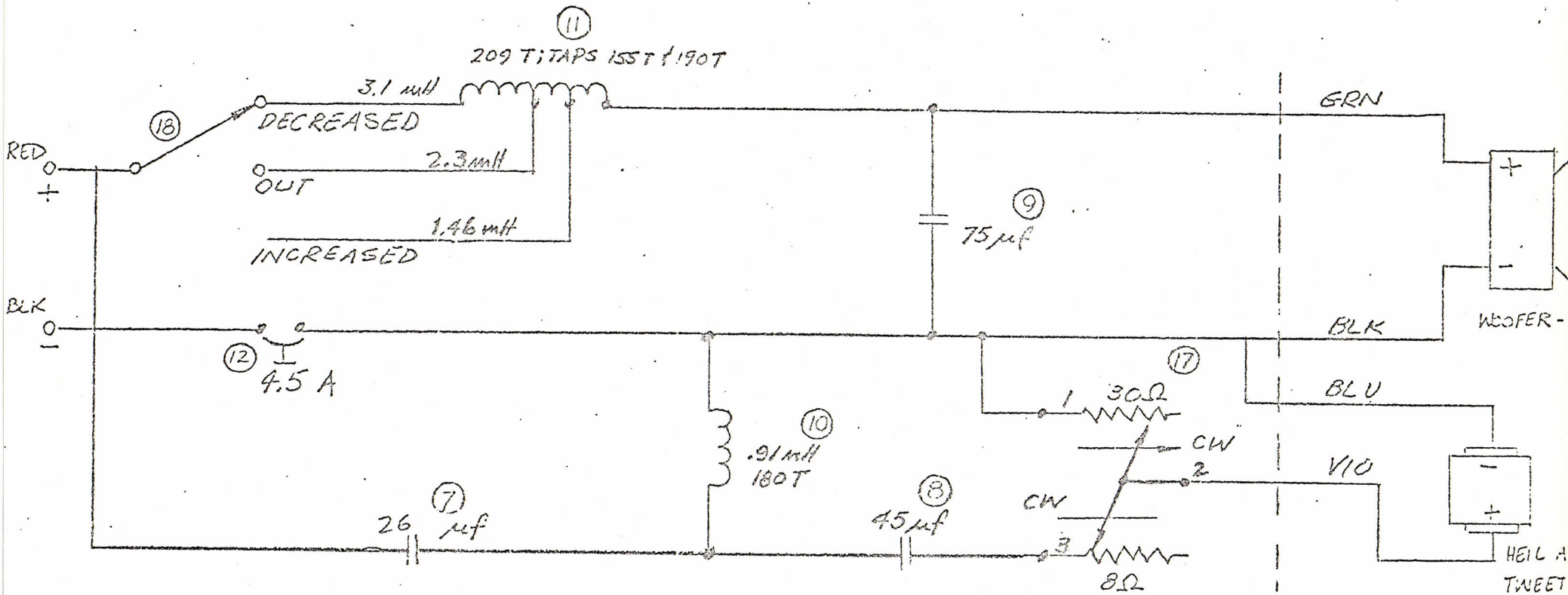
11
209 T; TAPS 155 T & 190 T
3.1 mH
DECREASED
2.3 mH
OUT
1.46 mH
INCREASED
18
RED
+
BLK
−
12
4.5 A
9
75 µf
GRN
BLK
BLU
VIO
WOOFER -
17
1
30Ω
CW
2
CW
3
8Ω
10
.91 mH
180 T
7
26 µf
8
45 µf
HEIL A
TWEET

AMT-IA

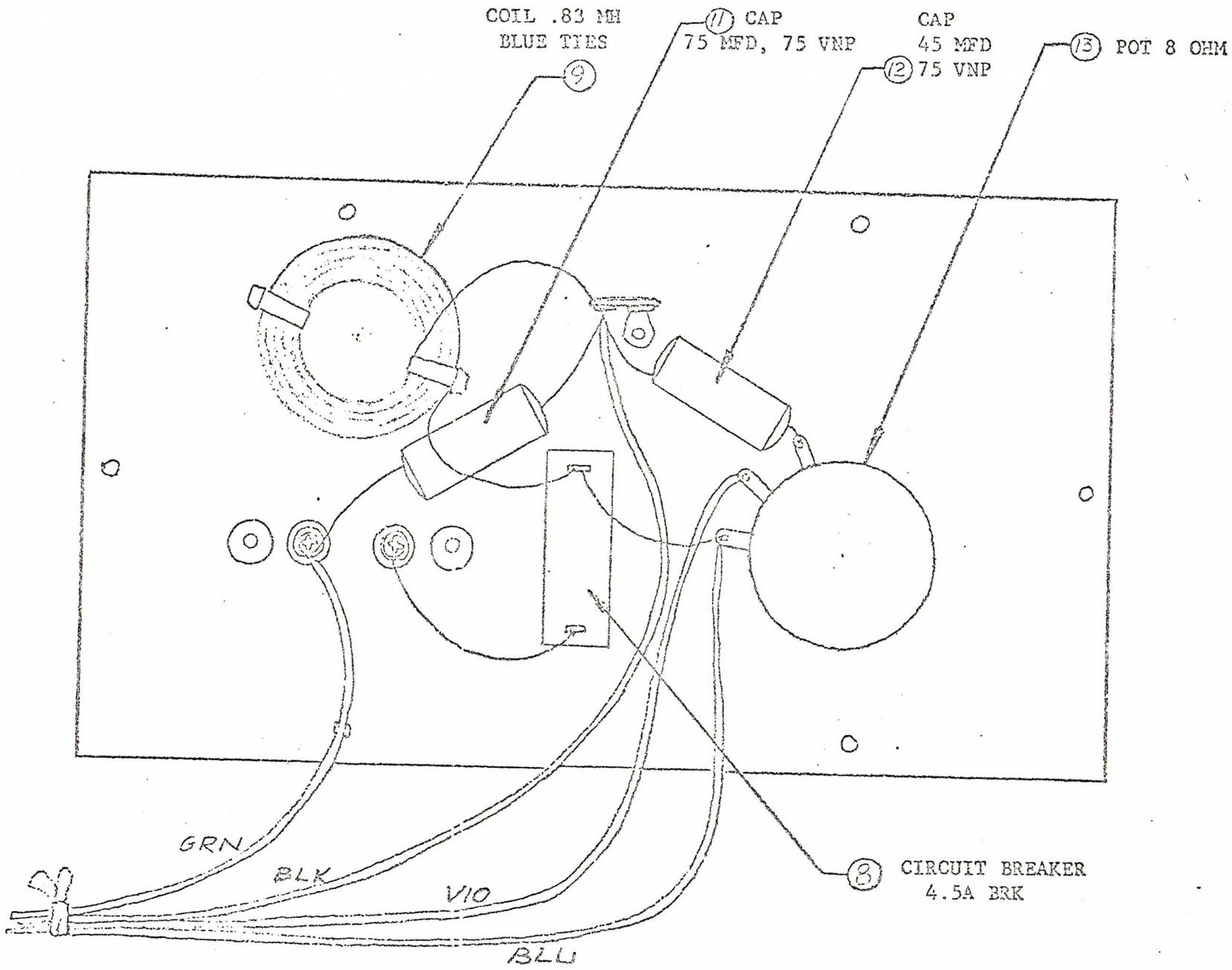


AMT - IA BOCKSHELF

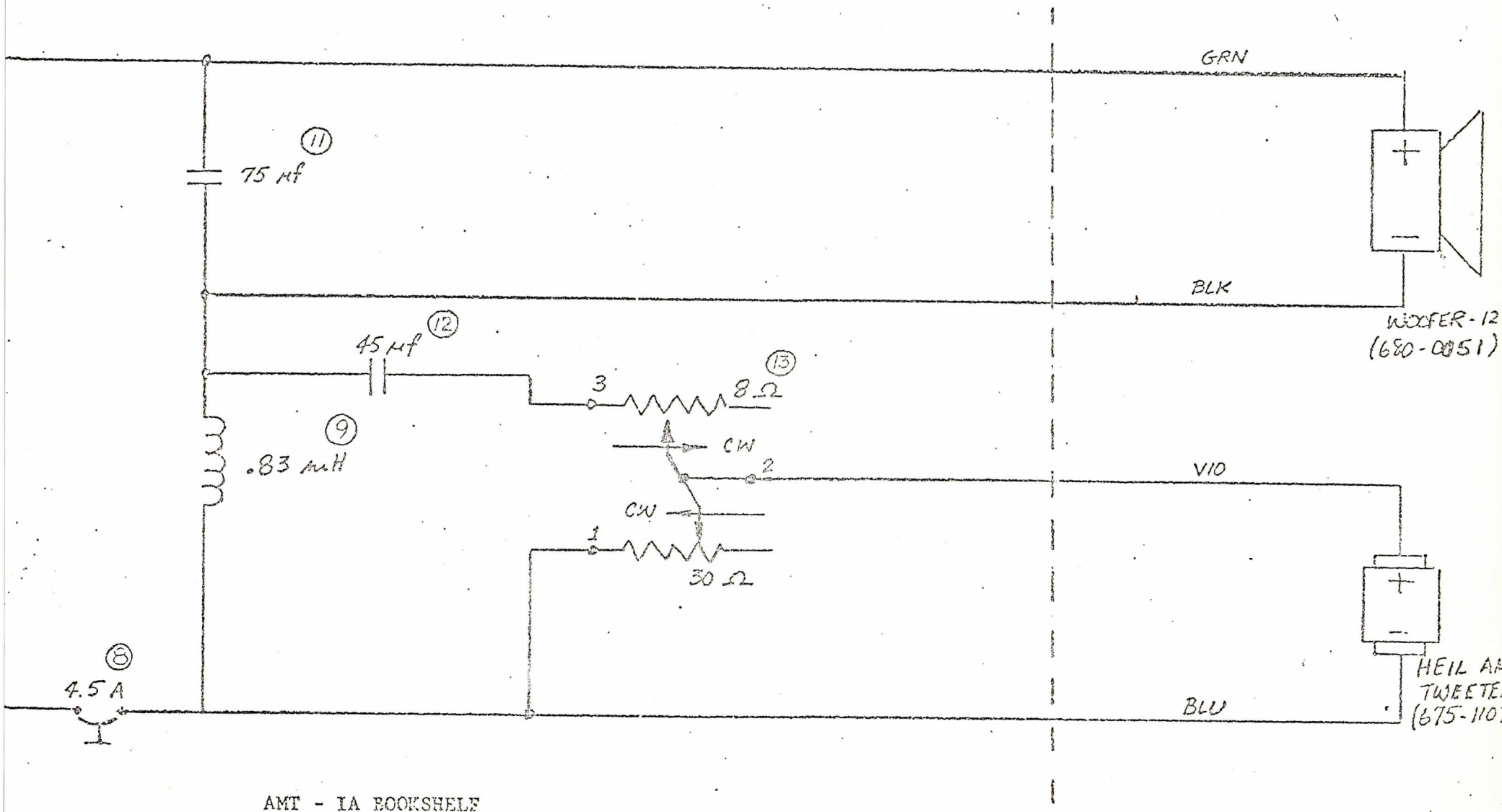


AMT - IA BOOKSHELF

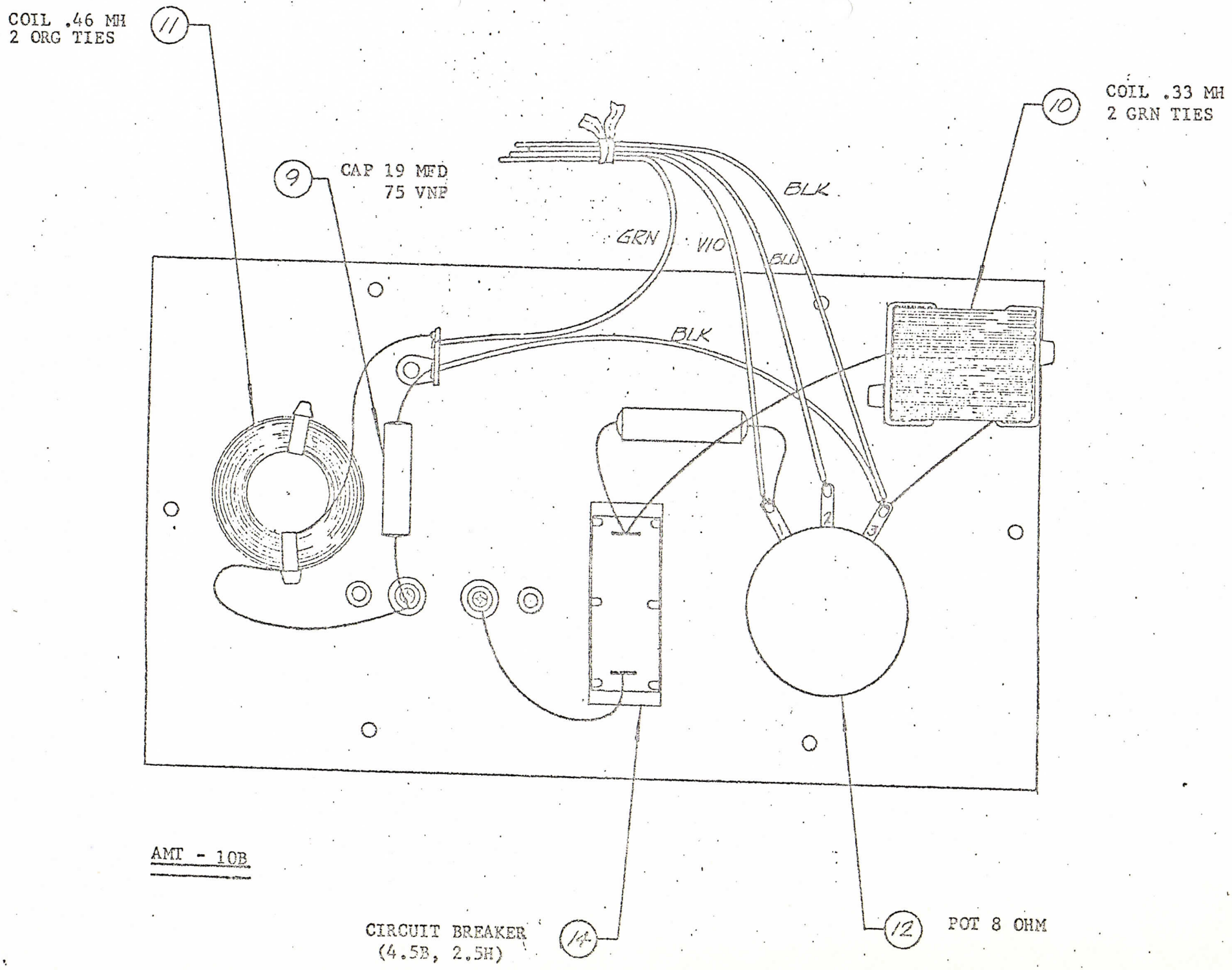
COIL .46 MH
2 ORG TIES
11
9
CAP 19 MFD
75 VNP
10
COIL .33 MH
2 GRN TIES
BLK
GRN
VIO
BLU
BLK
1
2
3
AMT - 10B
CIRCUIT BREAKER
(4.5B, 2.5H)
14
12
POT 8 OHM

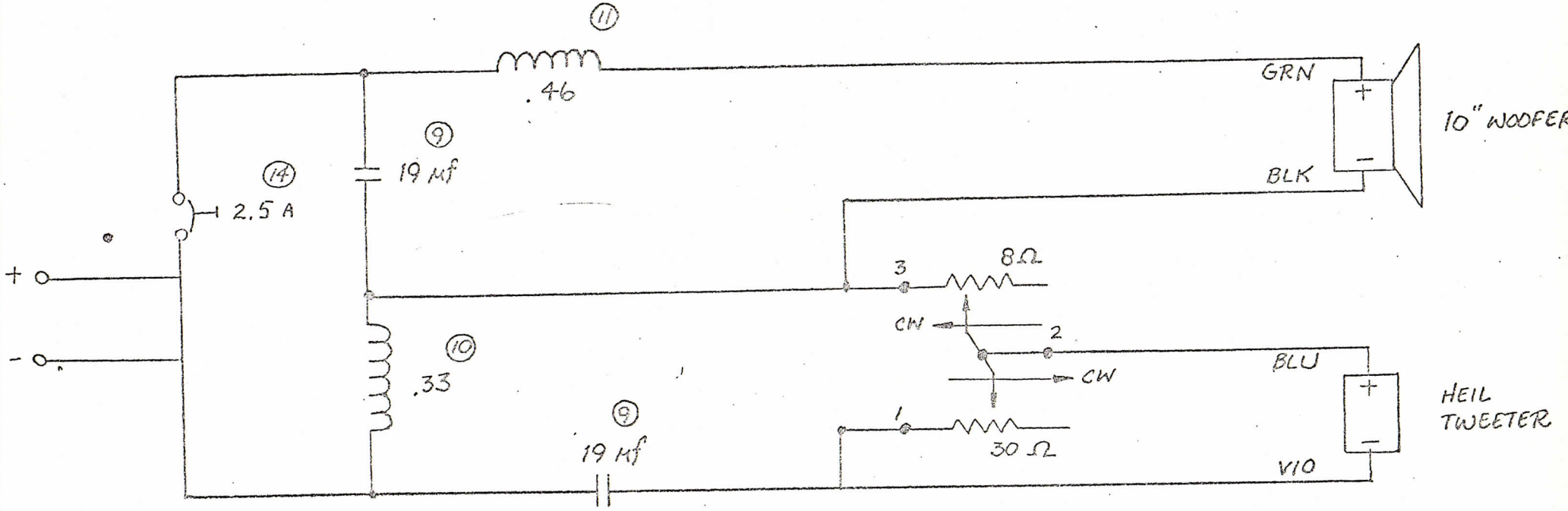
(11)
.46
(9)
19 Mf
(14)
2.5 A
+
-
(10)
.33
(9)
19 Mf
3
8Ω
CW
2
CW
1
30 Ω
GRN
BLK
10" WOOFER
BLU
V10
HEIL
TWEETER

AMT - 10B

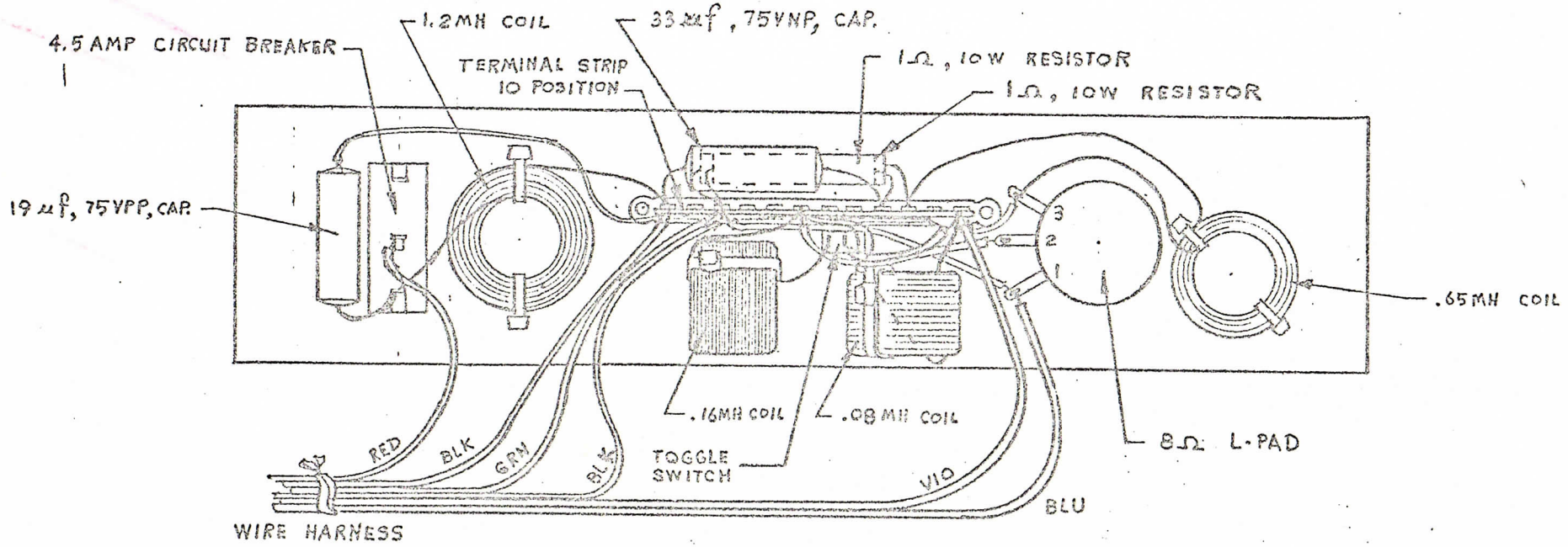


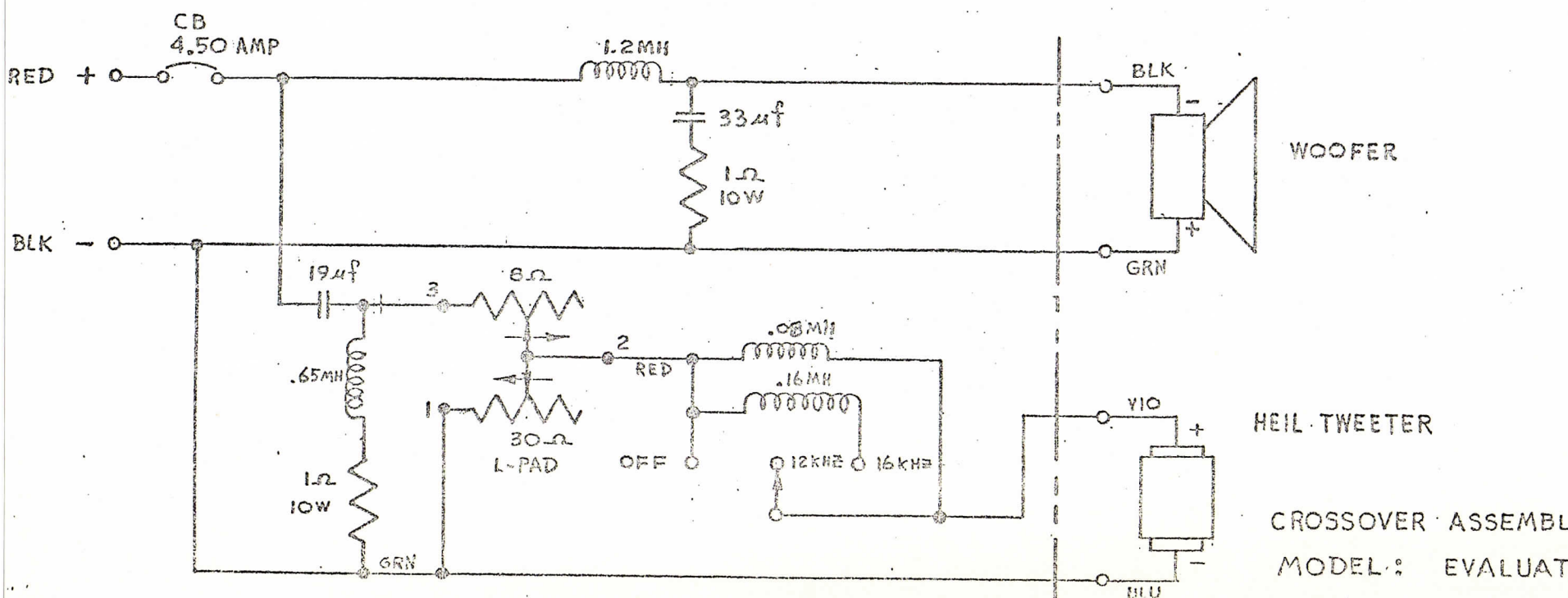


CROSSOVER ASSEMBLY
MODEL: EVALUATOR

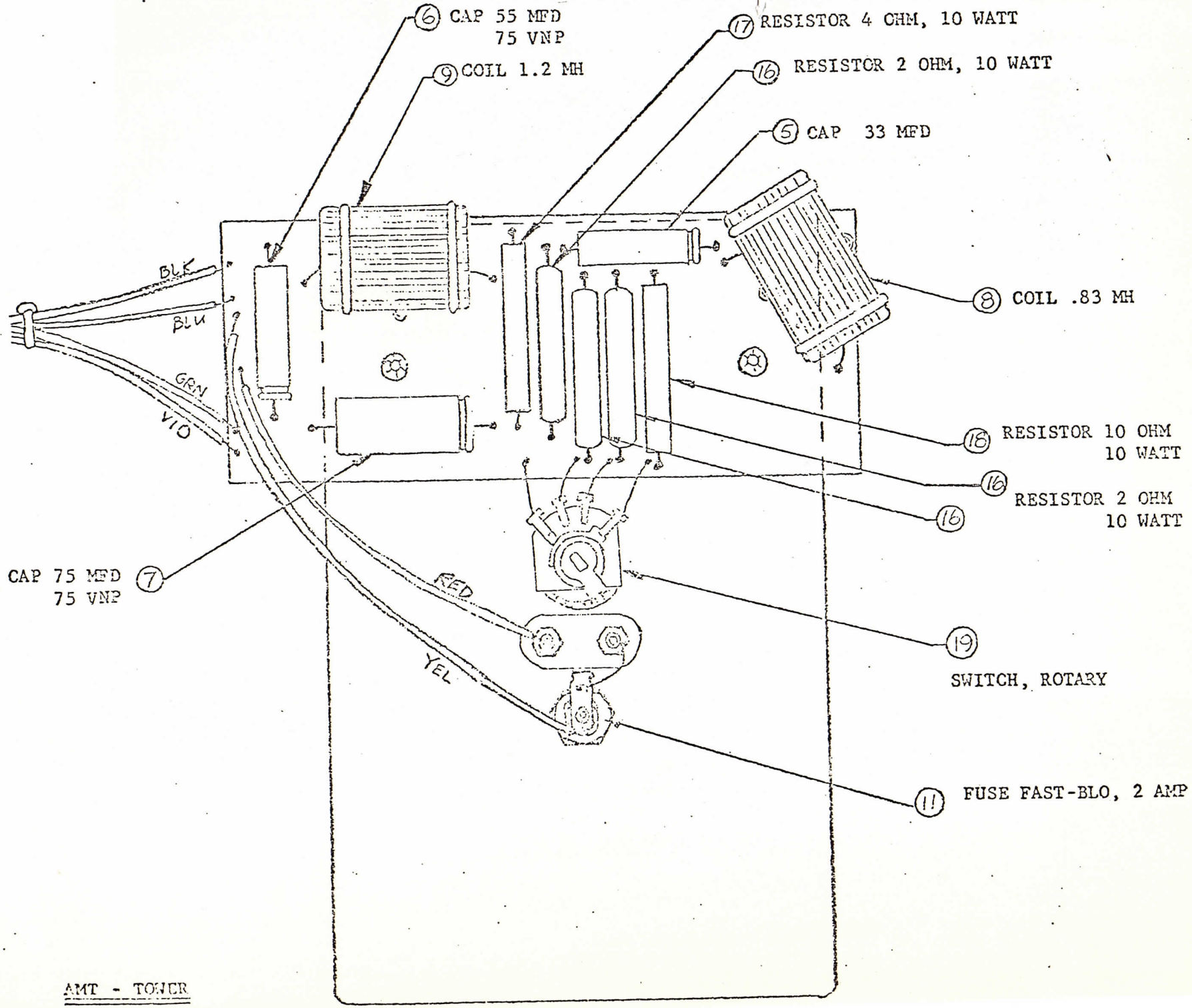
⑥ CAP 55 MFD
75 VNP
⑨ COIL 1.2 MH
⑰ RESISTOR 4 OHM, 10 WATT
⑯ RESISTOR 2 OHM, 10 WATT
⑤ CAP 33 MFD
⑧ COIL .83 MH
BLK
BLU
GRN
VIO
⑱ RESISTOR 10 OHM
10 WATT
⑯ RESISTOR 2 OHM
10 WATT
⑯
CAP 75 MFD
75 VNP
⑦
RED
YEL
⑲
SWITCH, ROTARY
⑪ FUSE FAST-BLO, 2 AMP

AMT - TOWER

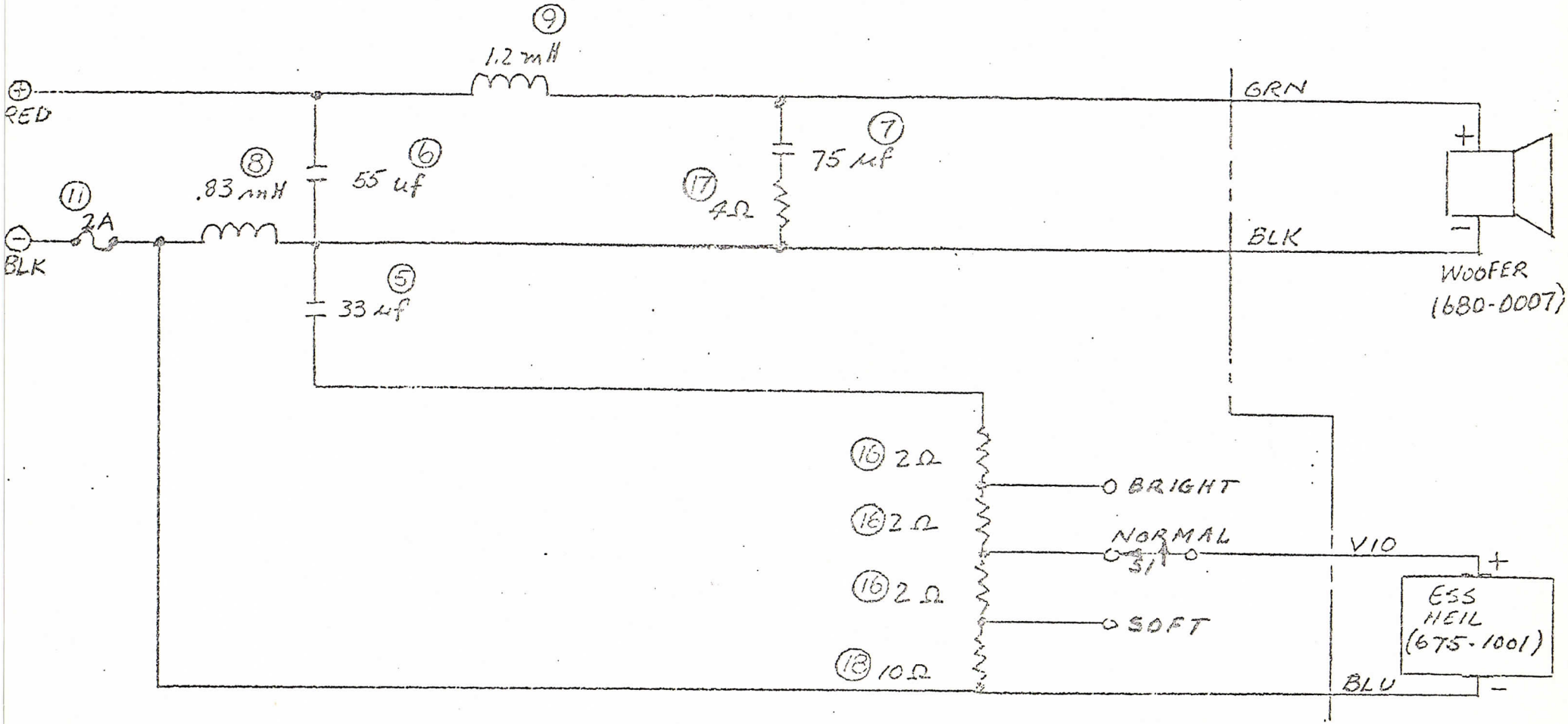
⑨
1.2 mH
+
RED
⑧
.83 mH
⑥
55 uf
⑦
75 uf
⑰
4Ω
GRN
+
BLK
⑪
2A
−
BLK
⑤
33 uf
WOOFER
(680-0007)
⑯ 2Ω
⑯ 2Ω
⑯ 2Ω
⑱ 10Ω
BRIGHT
NORMAL
SOFT
S1
V10
+
ESS
HEIL
(675-1001)
BLU
−

AMT - TOWER

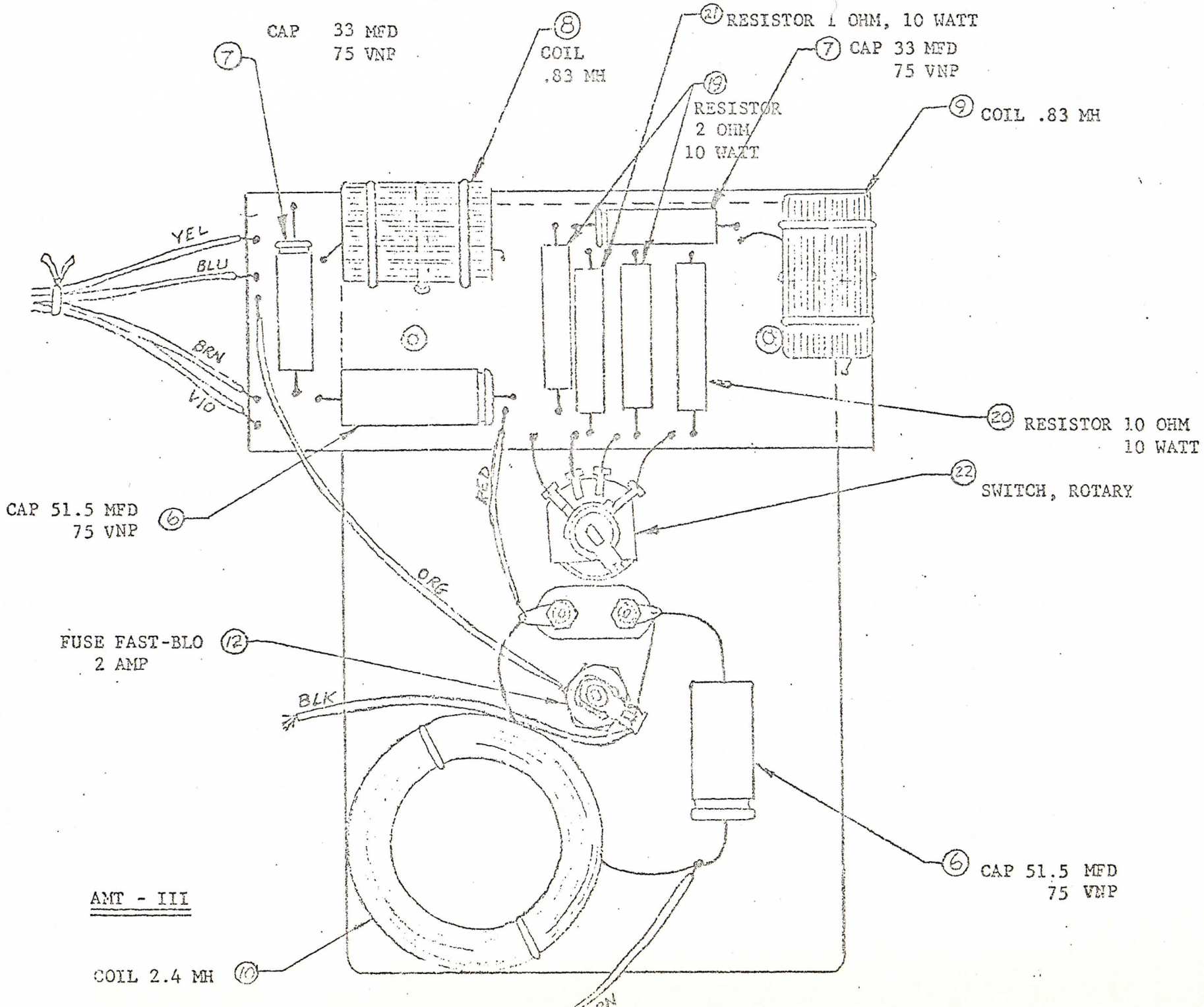
CAP 33 MFD 75 VNP
COIL .83 MH
RESISTOR 1 OHM, 10 WATT
CAP 33 MFD 75 VNP
RESISTOR 2 OHM 10 WATT
COIL .83 MH
YEL
BLU
BRN
VIO
RESISTOR 10 OHM 10 WATT
CAP 51.5 MFD 75 VNP
SWITCH, ROTARY
RED
ORG
FUSE FAST-BLO 2 AMP
BLK
CAP 51.5 MFD 75 VNP
AMT - III
COIL 2.4 MH

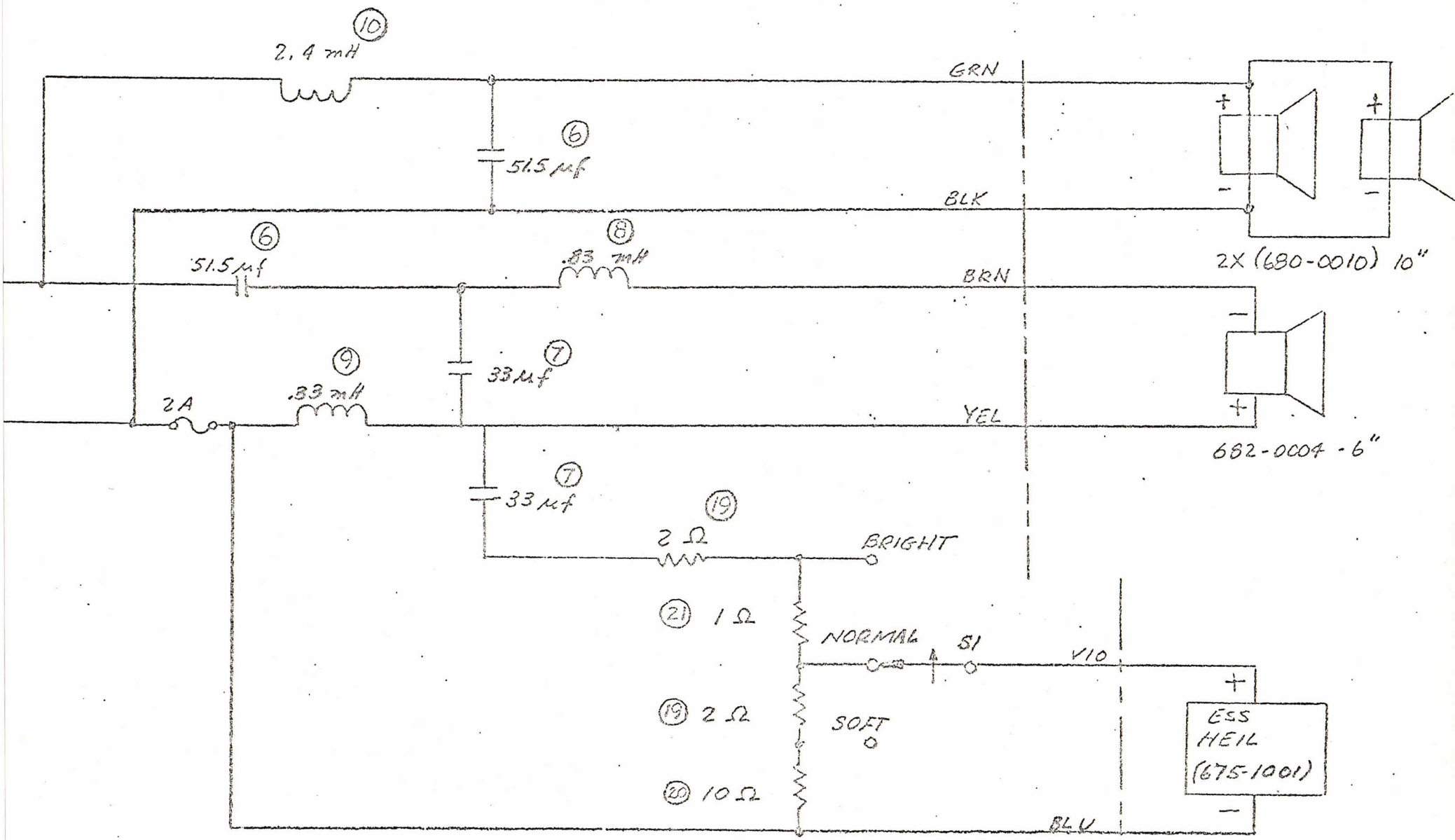
10
2.4 mH
GRN
6
51.5 µf
BLK
6
51.5 µf
8
.83 mH
BRN
2X (680-0010) 10"
9
.33 mH
7
33 µf
2A
YEL
682-0004 - 6"
7
33 µf
19
2 Ω
BRIGHT
21
1 Ω
NORMAL
SI
V10
19
2 Ω
SOFT
20
10 Ω
ESS
HEIL
(675-1001)
BLU

AMT - III

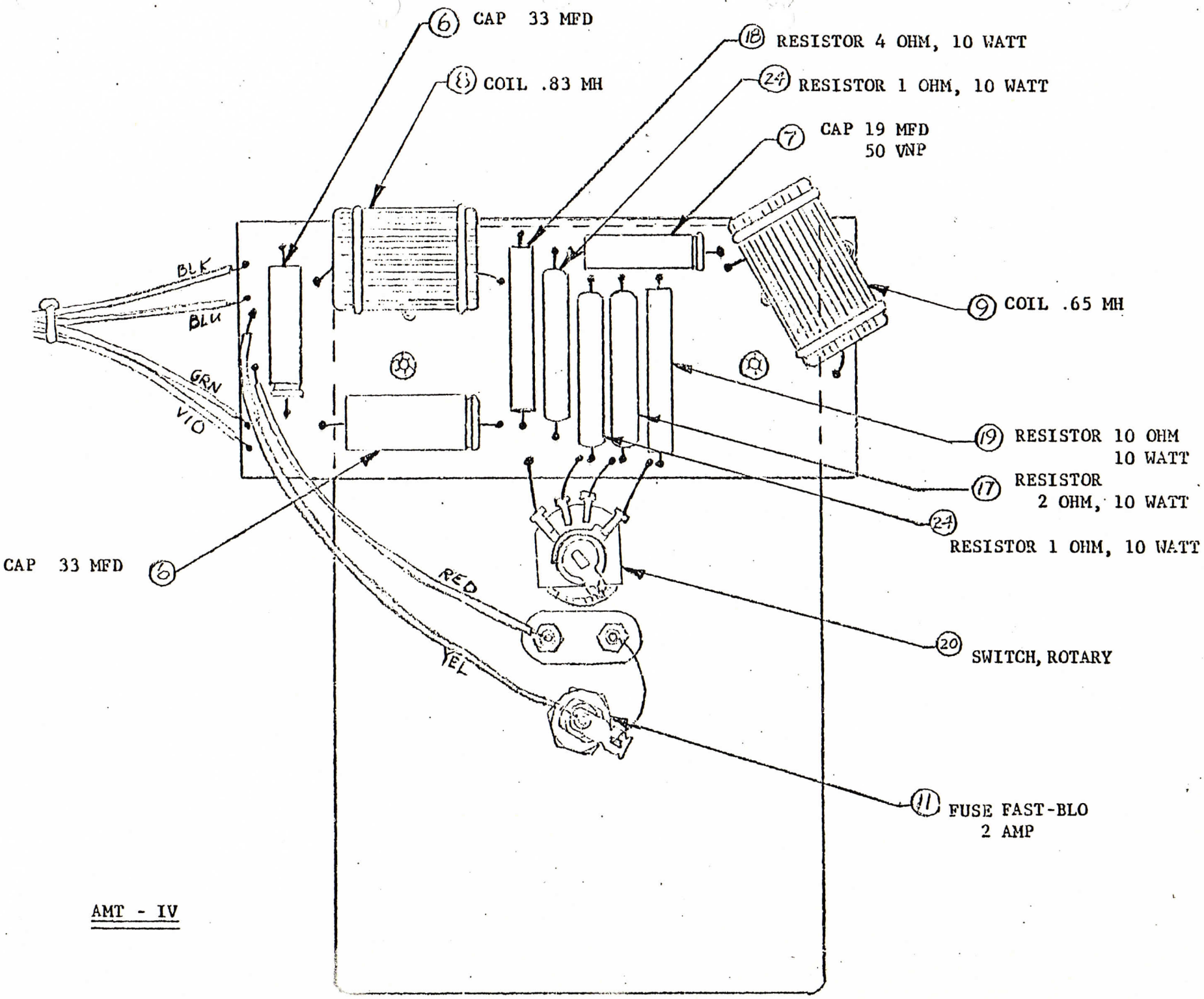
6 CAP 33 MFD
8 COIL .83 MH
18 RESISTOR 4 OHM, 10 WATT
24 RESISTOR 1 OHM, 10 WATT
7 CAP 19 MFD 50 VNP
9 COIL .65 MH
BLK
BLU
GRN
VIO
19 RESISTOR 10 OHM 10 WATT
17 RESISTOR 2 OHM, 10 WATT
24 RESISTOR 1 OHM, 10 WATT
CAP 33 MFD 6
RED
YEL
20 SWITCH, ROTARY
11 FUSE FAST-BLO 2 AMP

AMT - IV

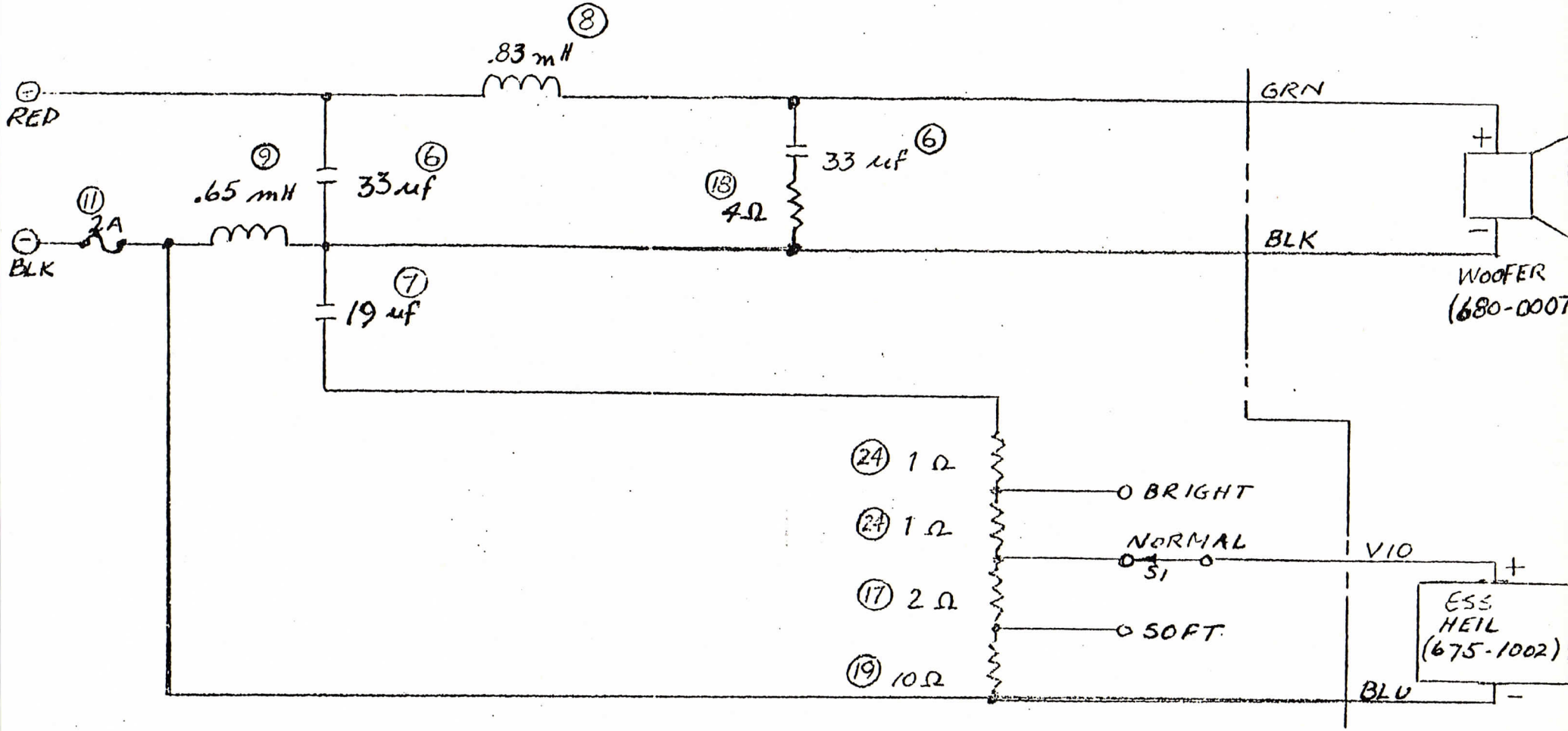
⑧
.83 mH
RED
⑨
.65 mH
⑥
33 uf
⑪
2A
BLK
⑦
19 uf
⑱
4Ω
⑥
33 uf
GRN
BLK
WOOFER
(680-0007
⑳ 1 Ω
⑳ 1 Ω
⑰ 2 Ω
⑲ 10 Ω
BRIGHT
NORMAL
S1
SOFT
V10
ESS
HEIL
(675-1002)
BLU

AMT - IV

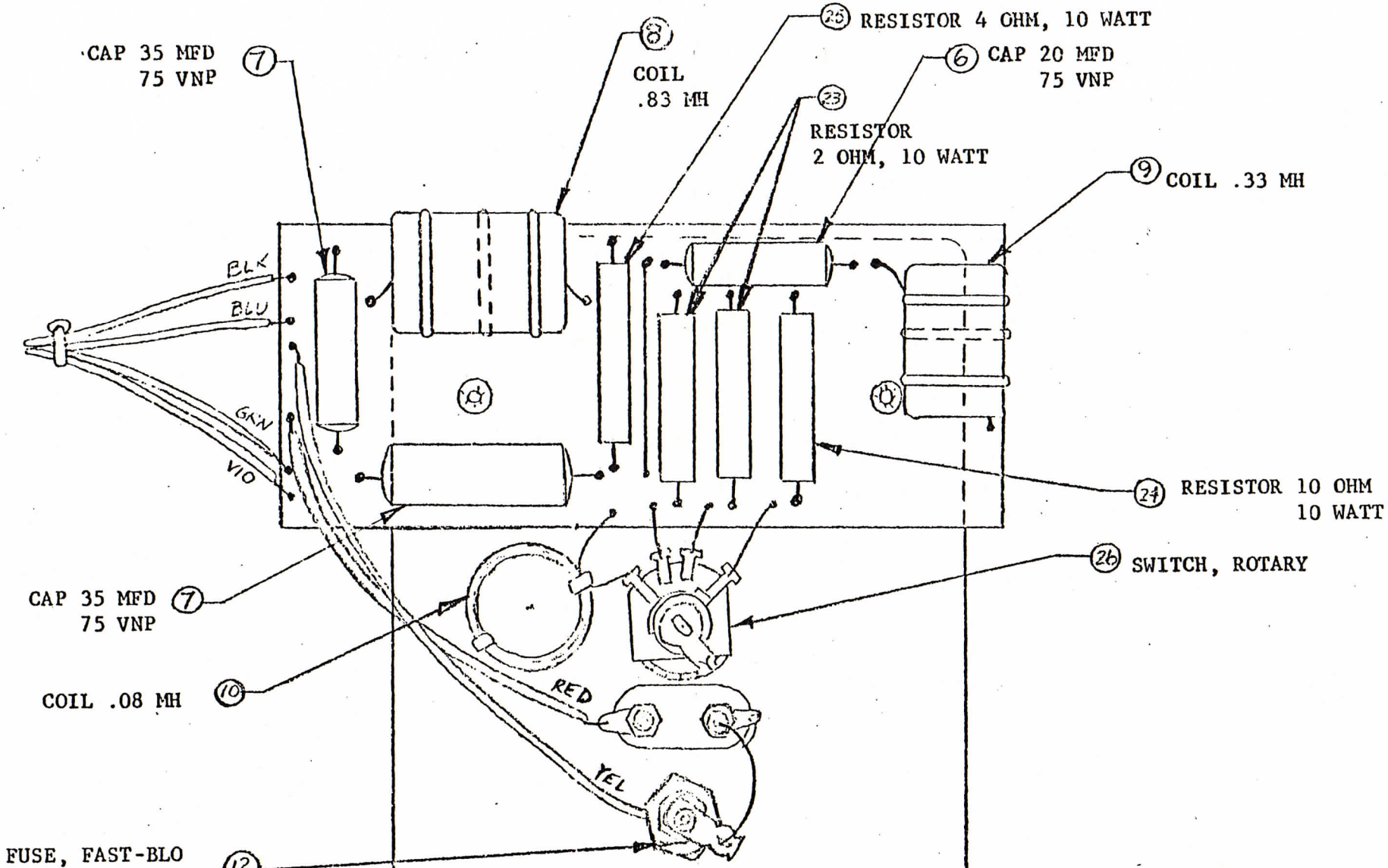
CAP 35 MFD
75 VNP
7
8
COIL
.83 MH
25
RESISTOR 4 OHM, 10 WATT
6
CAP 20 MFD
75 VNP
23
RESISTOR
2 OHM, 10 WATT
9
COIL .33 MH
BLK
BLU
GRN
VIO
24
RESISTOR 10 OHM
10 WATT
26
SWITCH, ROTARY
CAP 35 MFD
75 VNP
7
COIL .08 MH
10
RED
YEL
FUSE, FAST-BLO
2 AMP
12

AMT - V

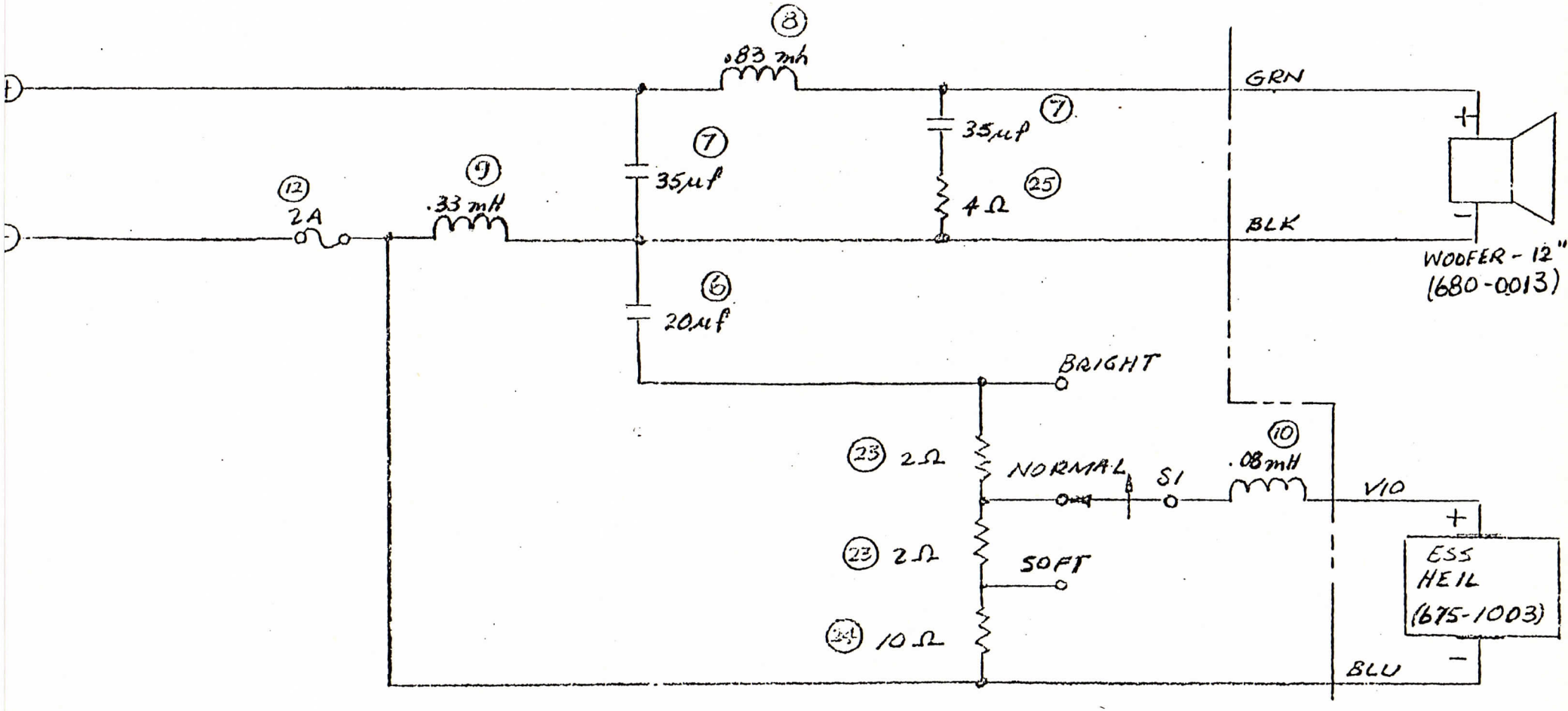
(8)
.83 mh
GRN
(7)
35μf
(7)
35μf
(9)
.33 mH
(12)
2A
4Ω
(25)
BLK
WOOFER - 12"
(680-0013)
(6)
20μf
BRIGHT
(23) 2Ω
NORMAL
S1
(10)
.08mH
V10
(23) 2Ω
SOFT
ESS
HEIL
(675-1003)
(24) 10Ω
BLU

AMT - V

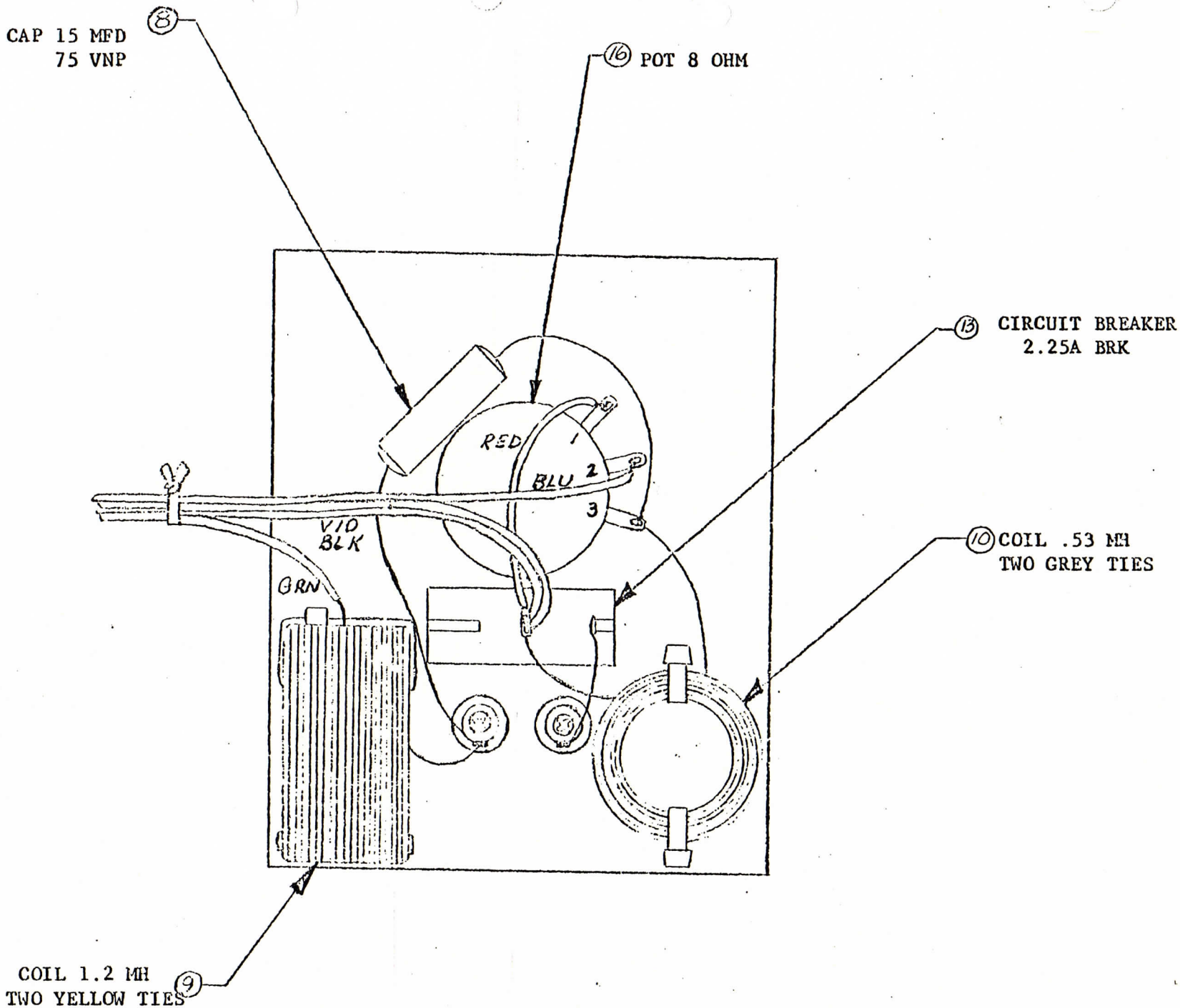
(8) CAP 15 MFD
75 VNP
(16) POT 8 OHM
(13) CIRCUIT BREAKER
2.25A BRK
(10) COIL .53 MH
TWO GREY TIES
RED
1
BLU
2
3
VIO
BLK
GRN
(9) COIL 1.2 MH
TWO YELLOW TIES

AMT - VA

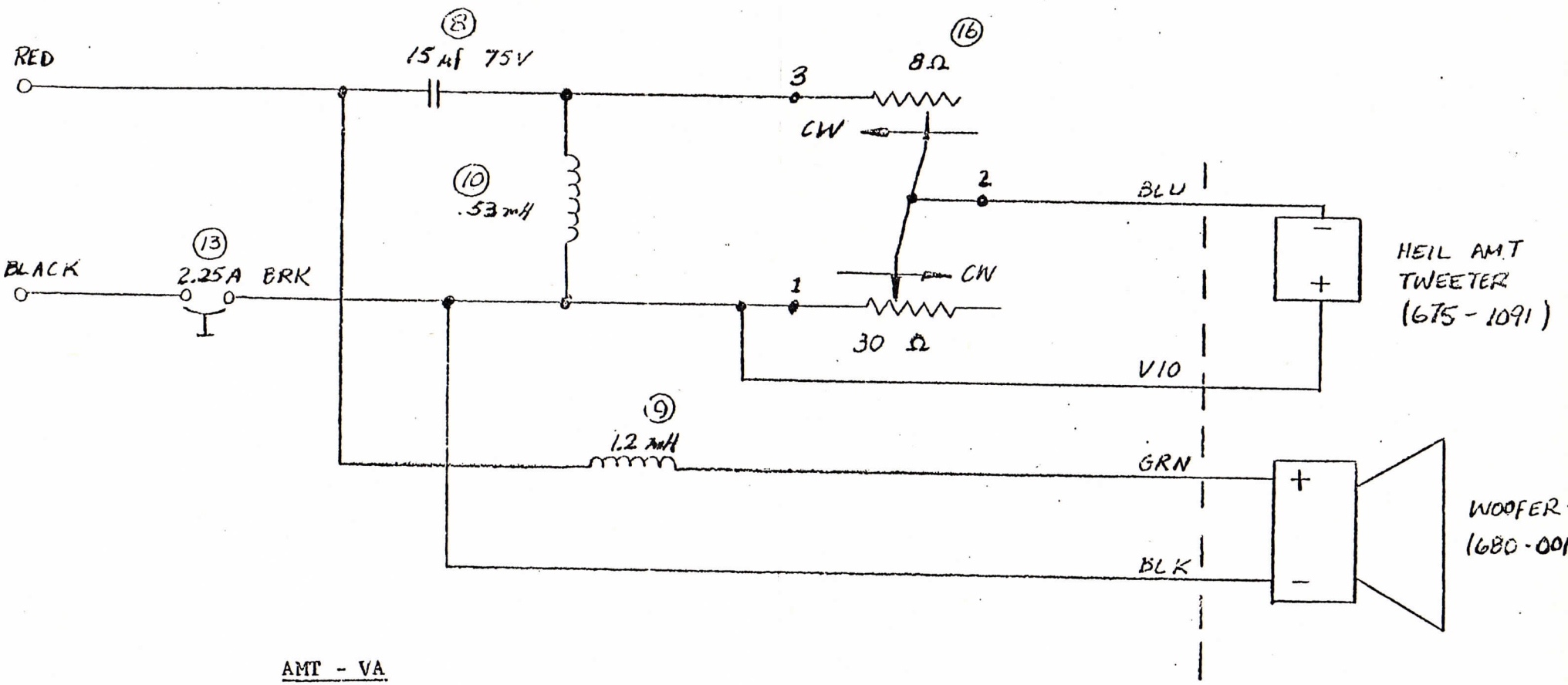
RED
(8)
15 µf 75V
3
(16)
8Ω
CW
(10)
.53 mH
2
BLU
(13)
BLACK
2.25A BRK
CW
1
30 Ω
HEIL AMT
TWEETER
(675 - 1091)
V10
(9)
1.2 mH
GRN
BLK
WOOFER
(680 - 00

AMT - VA

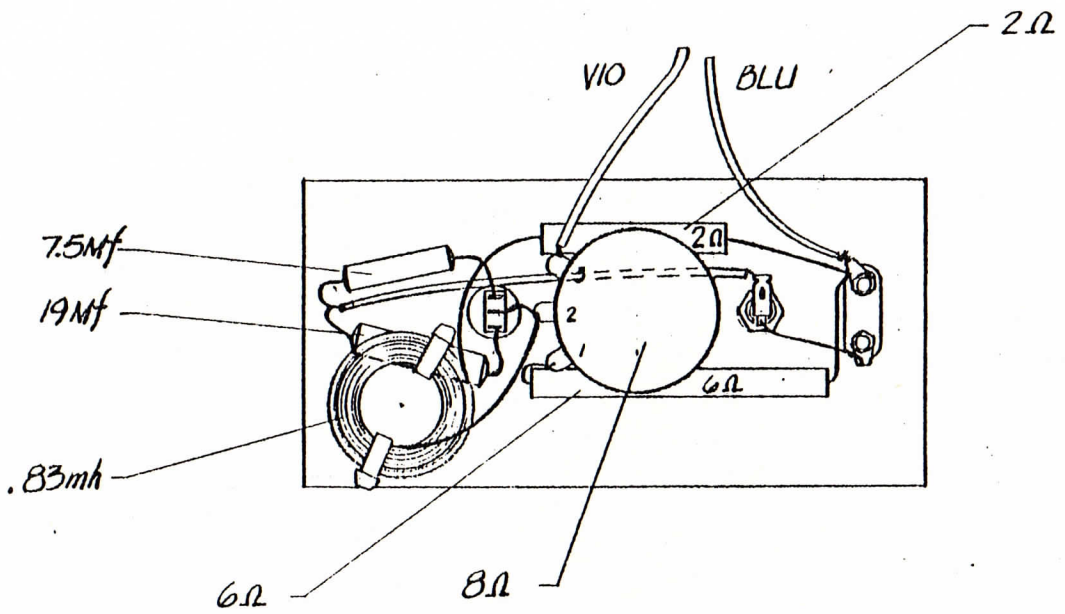


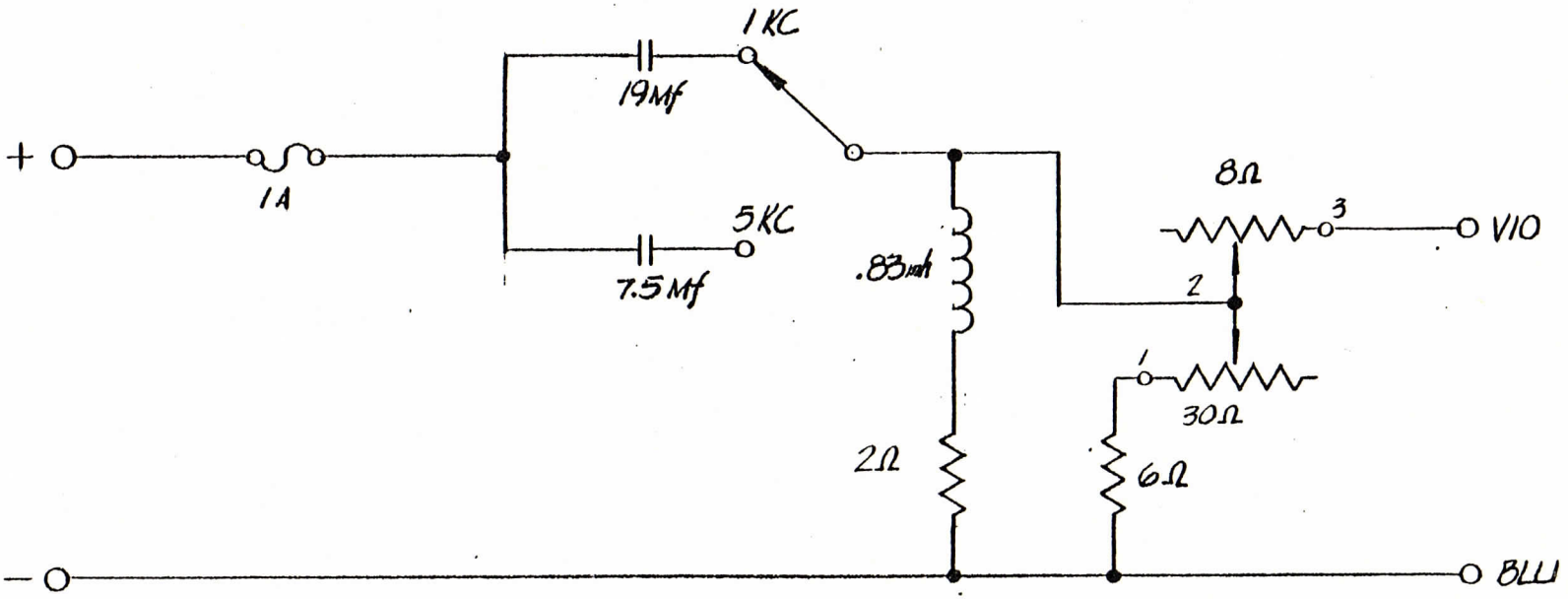


ESS ELITE
CROSSOVER ASSEMBLY
& SCHEMATIC
695-1019

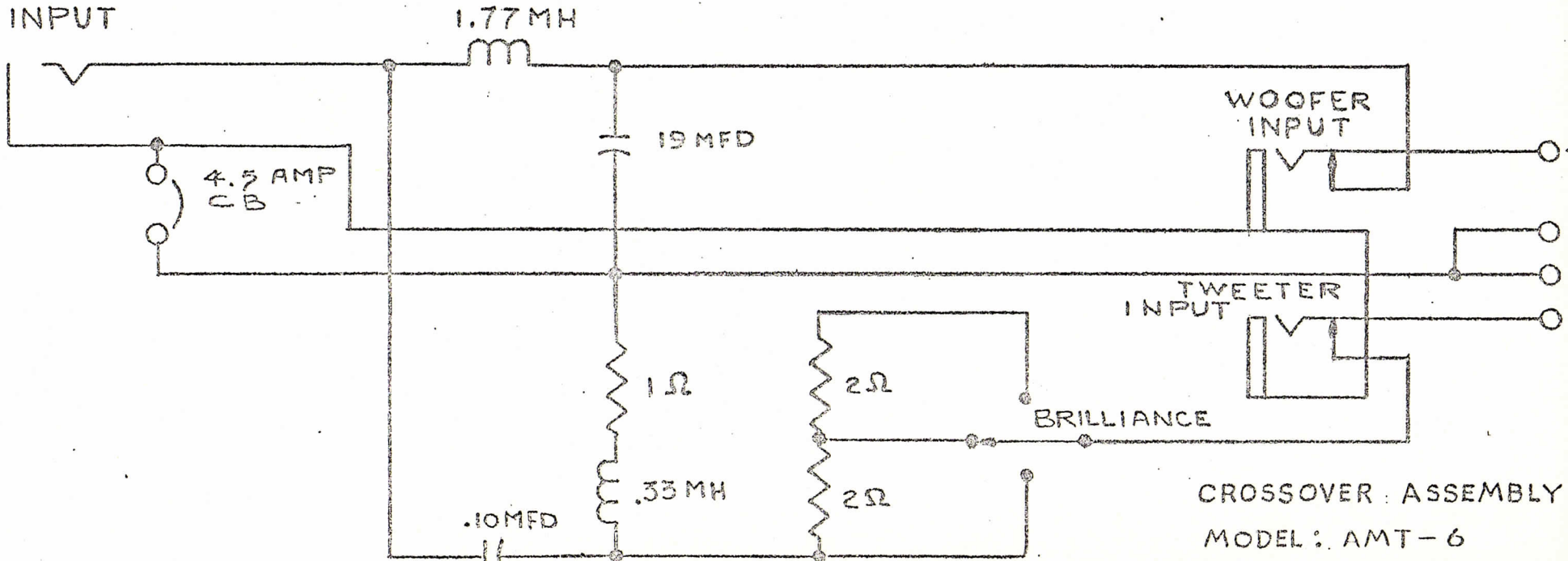


CROSSOVER ASSEMBLY

MODEL : AMT-6

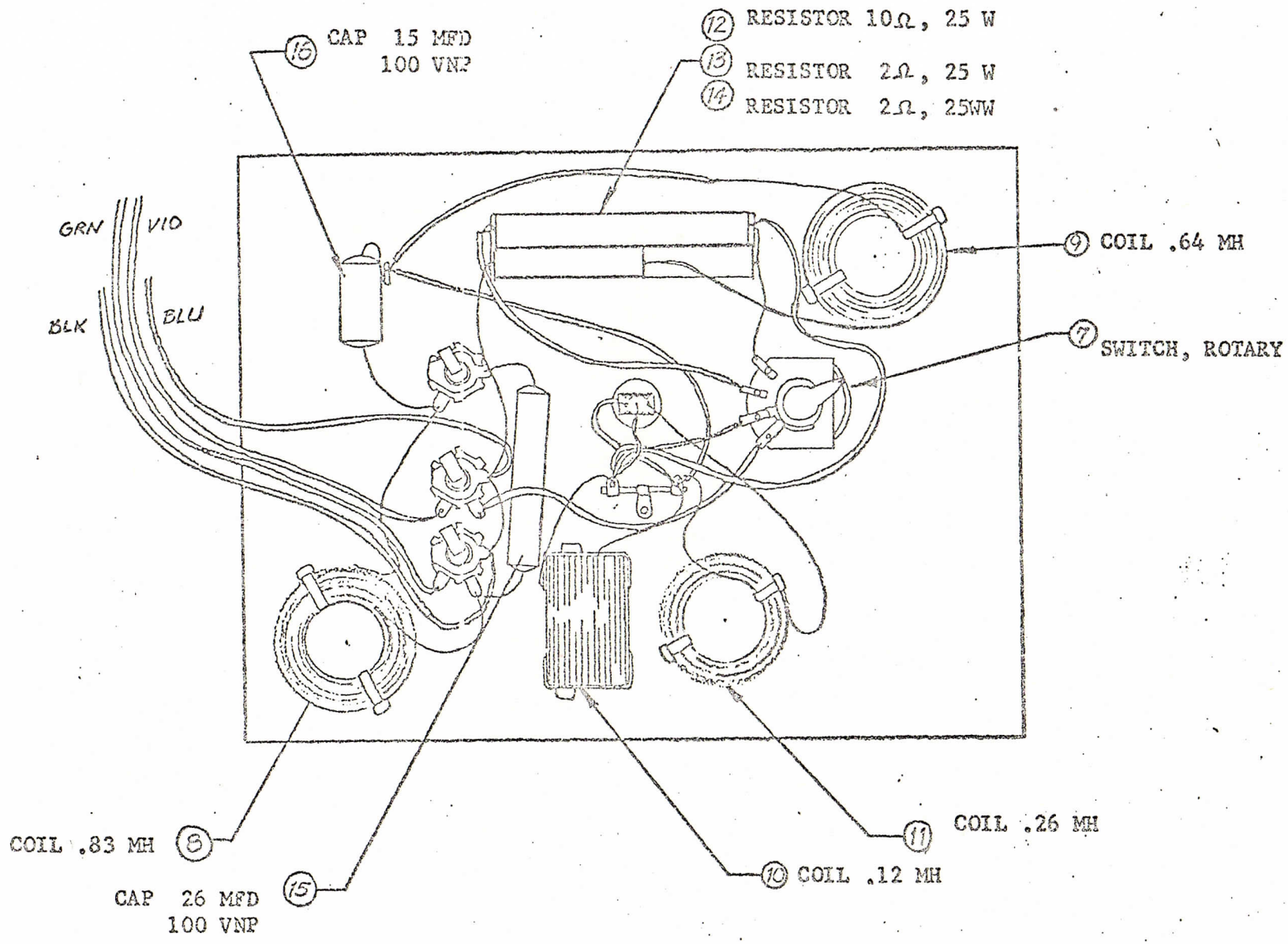
(16) CAP 15 MFD 100 VNP
(12) RESISTOR 10Ω, 25 W
(13) RESISTOR 2Ω, 25 W
(14) RESISTOR 2Ω, 25WW
GRN
VIO
BLK
BLU
(9) COIL .64 MH
(7) SWITCH, ROTARY
COIL .83 MH (8)
CAP 26 MFD 100 VNP
(15)
(10) COIL .12 MH
(11) COIL .26 MH

BLUE OX

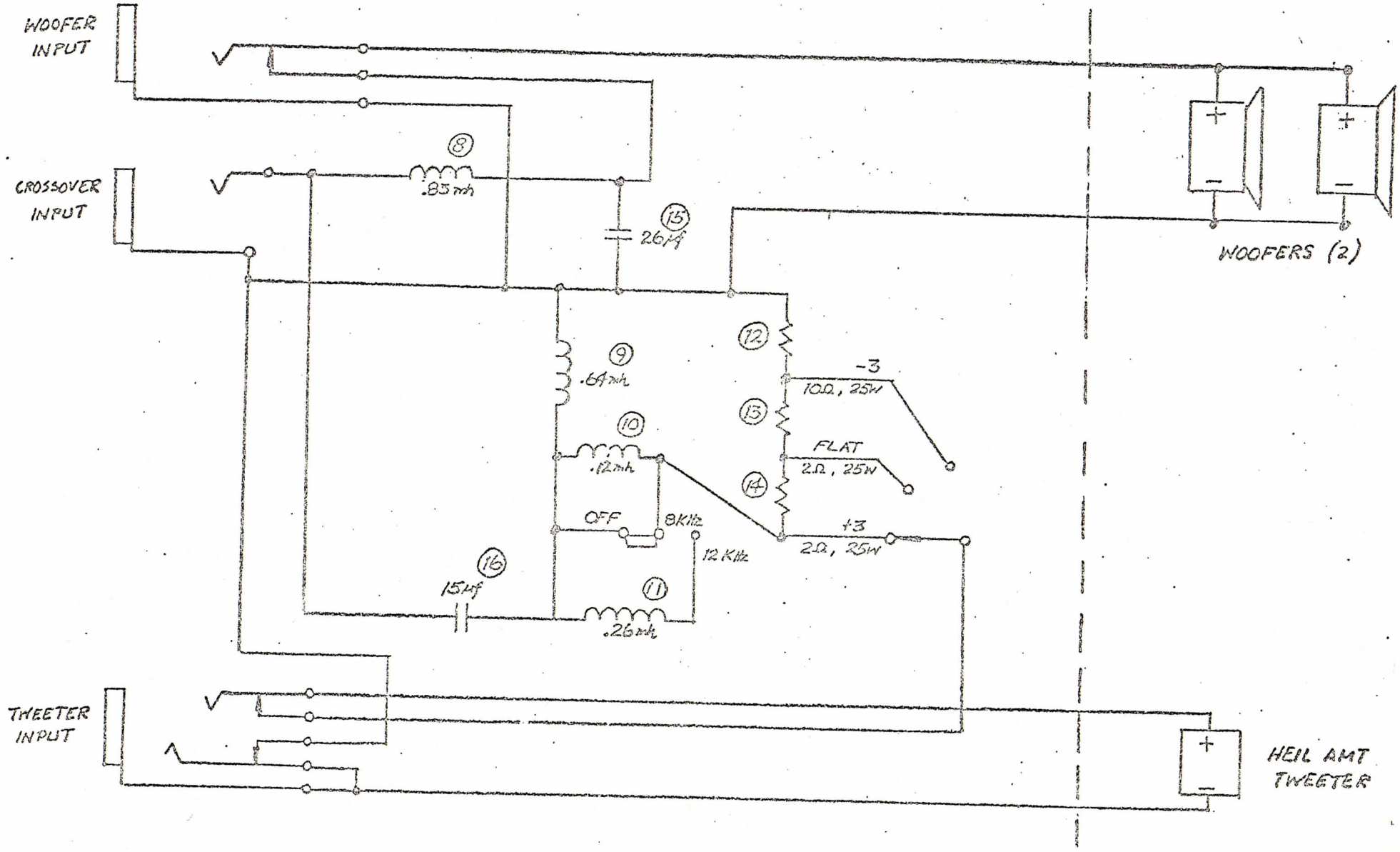
WOOFER INPUT
CROSSOVER INPUT
TWEETER INPUT
8
.85 mh
15
26 Mf
9
.64 mh
10
.12 mh
16
15 Mf
11
.26 mh
OFF
8 KHz
12 KHz
12
13
14
-3
10Ω, 25W
FLAT
2Ω, 25W
+3
2Ω, 25W
WOOFERS (2)
HEIL AMT TWEETER

BLUE OX

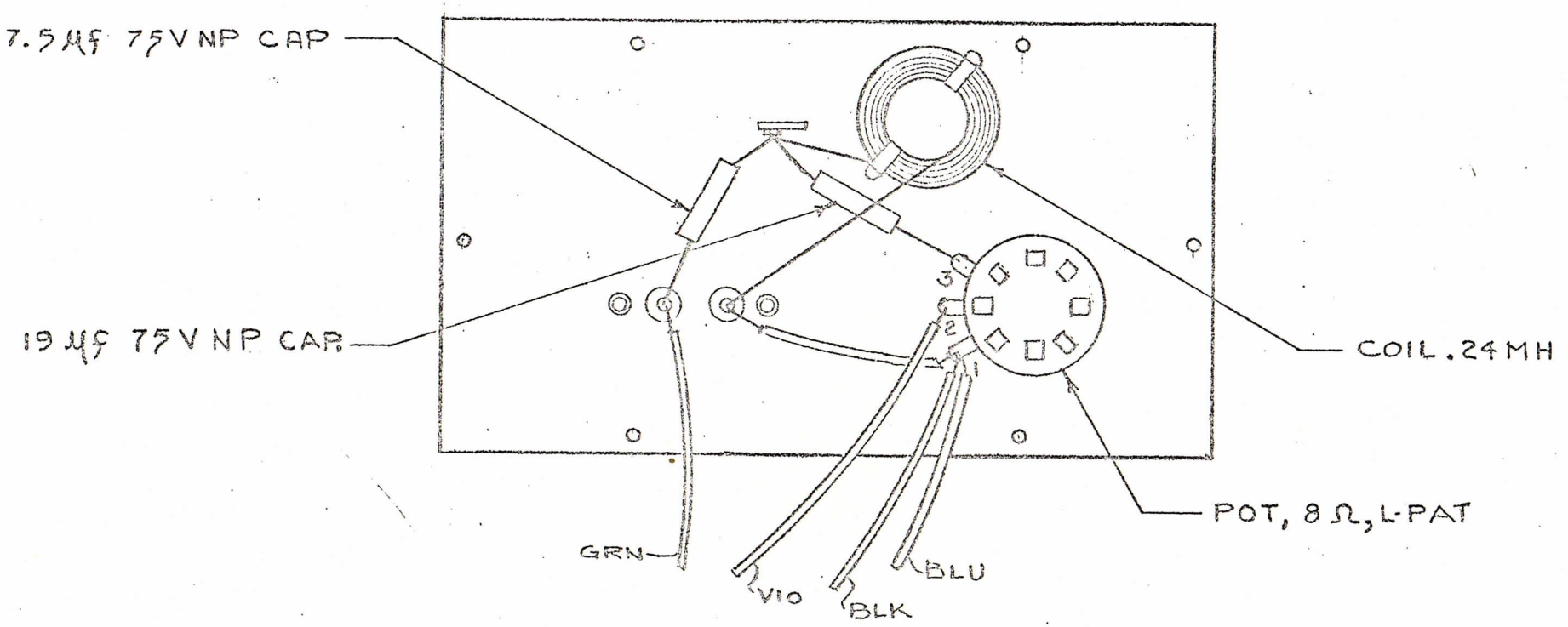


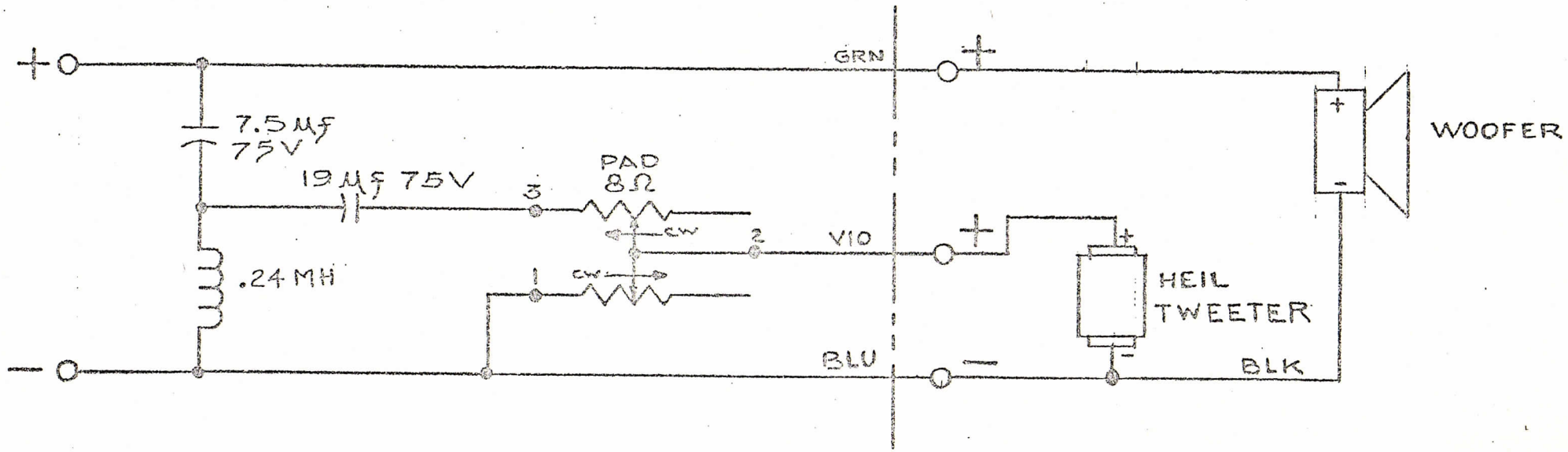


CROSSOVER ASSEMBLY
MODEL: LS-4

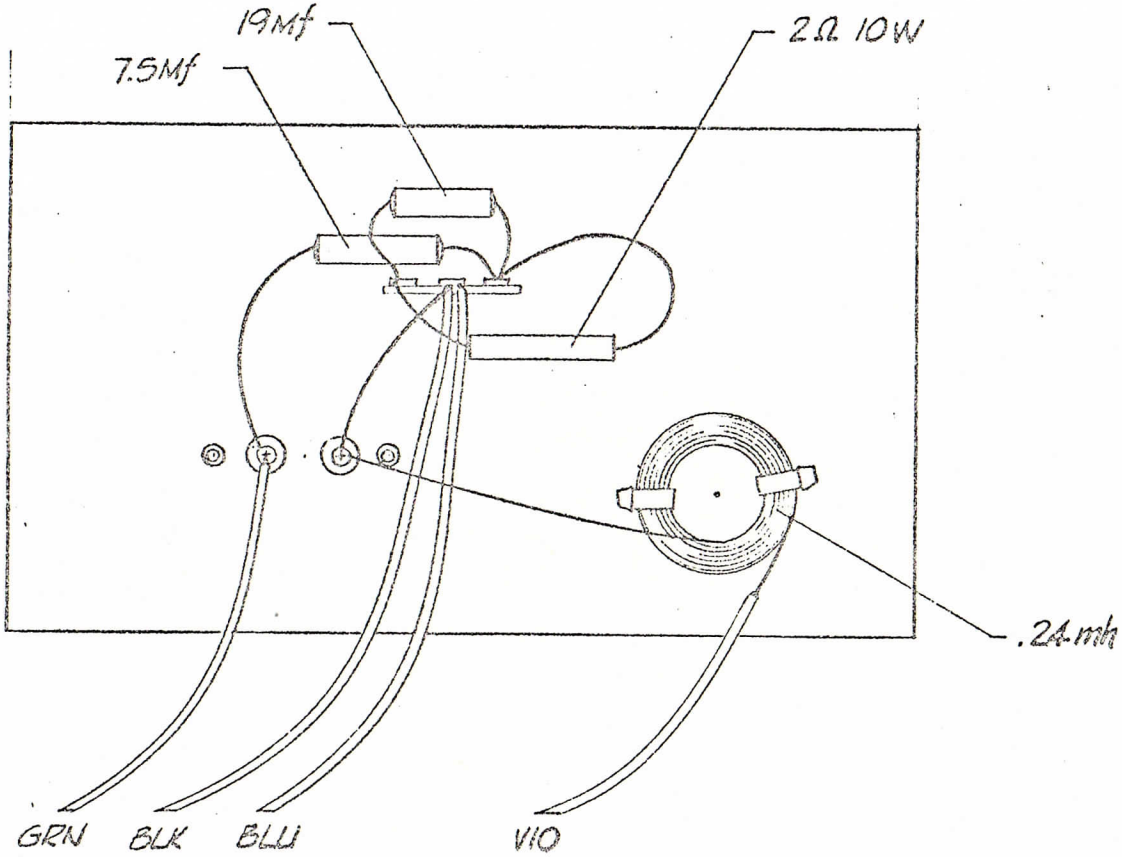


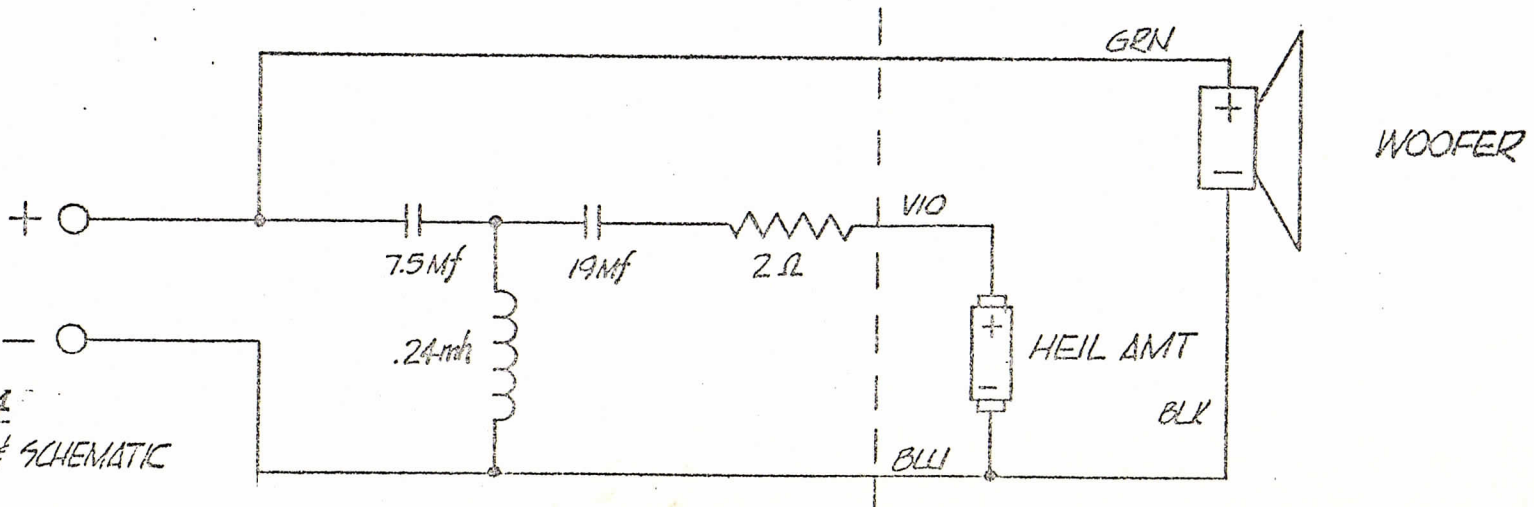


PERFORMANCE
SS REVISED PS-4
ROSSOVER ASSEMBLY & SCHEMATIC
95-1025

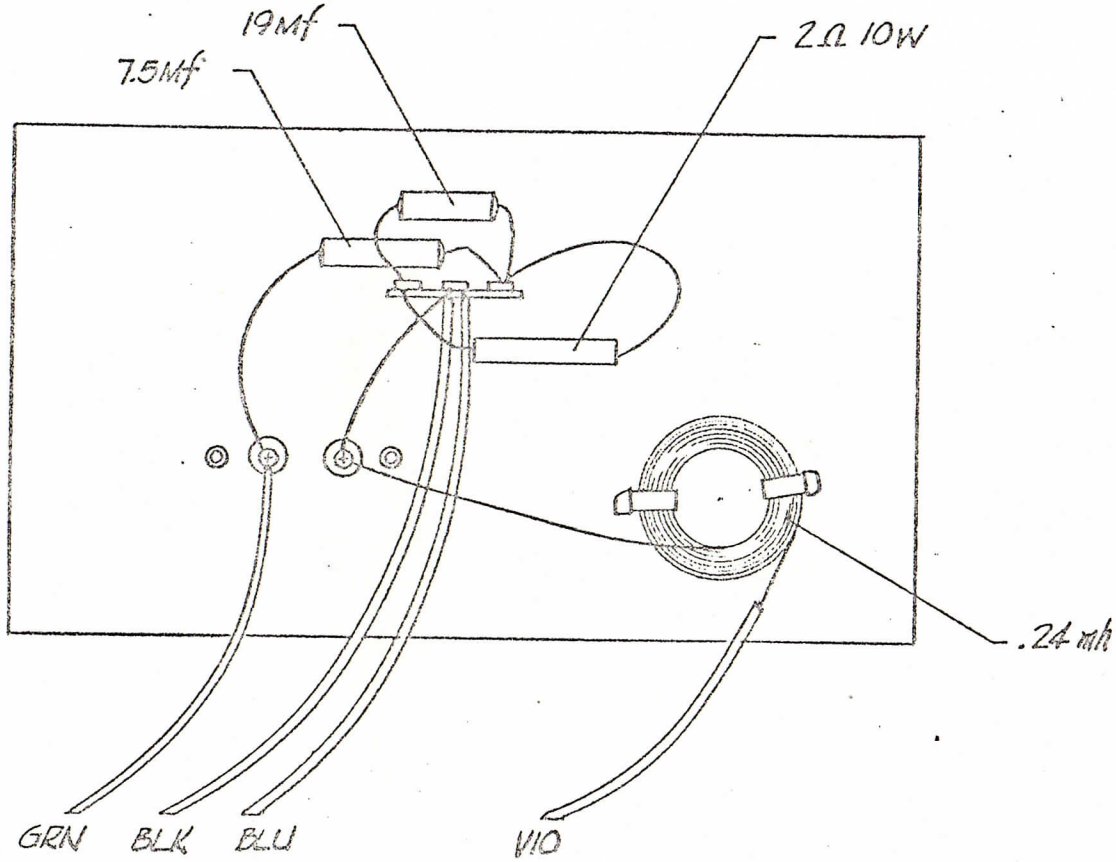


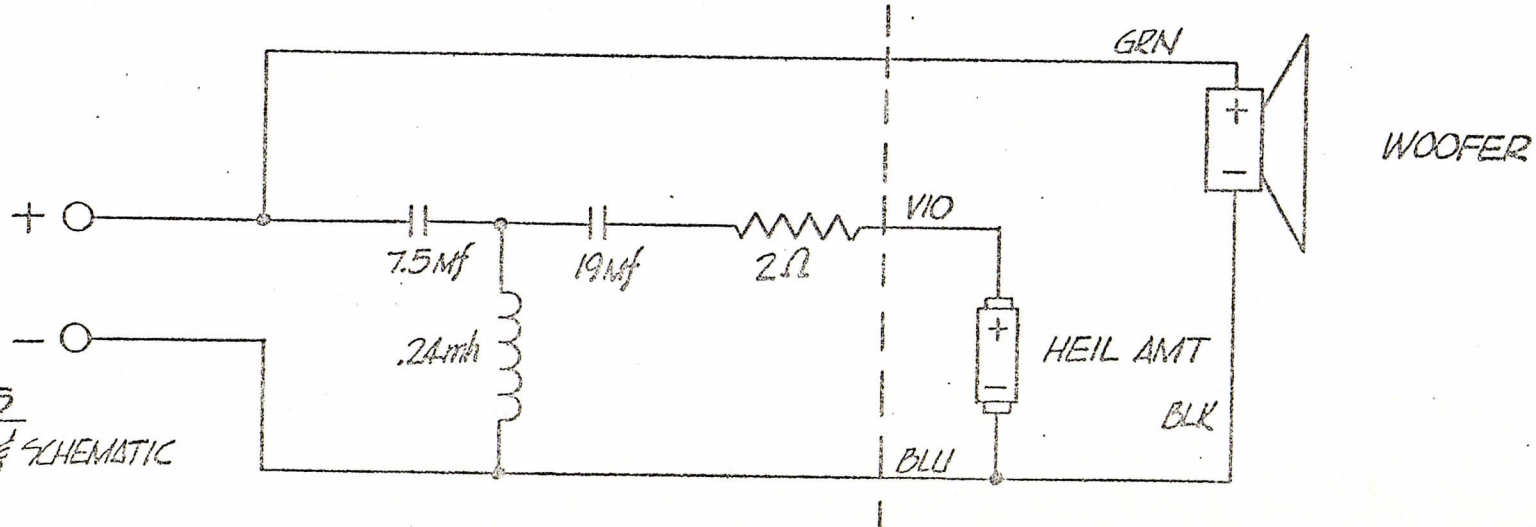


PERFORMANCE
SS [illegible] PS-5
OSSOVER ASSEMBLY & SCHEMATIC
95-1026

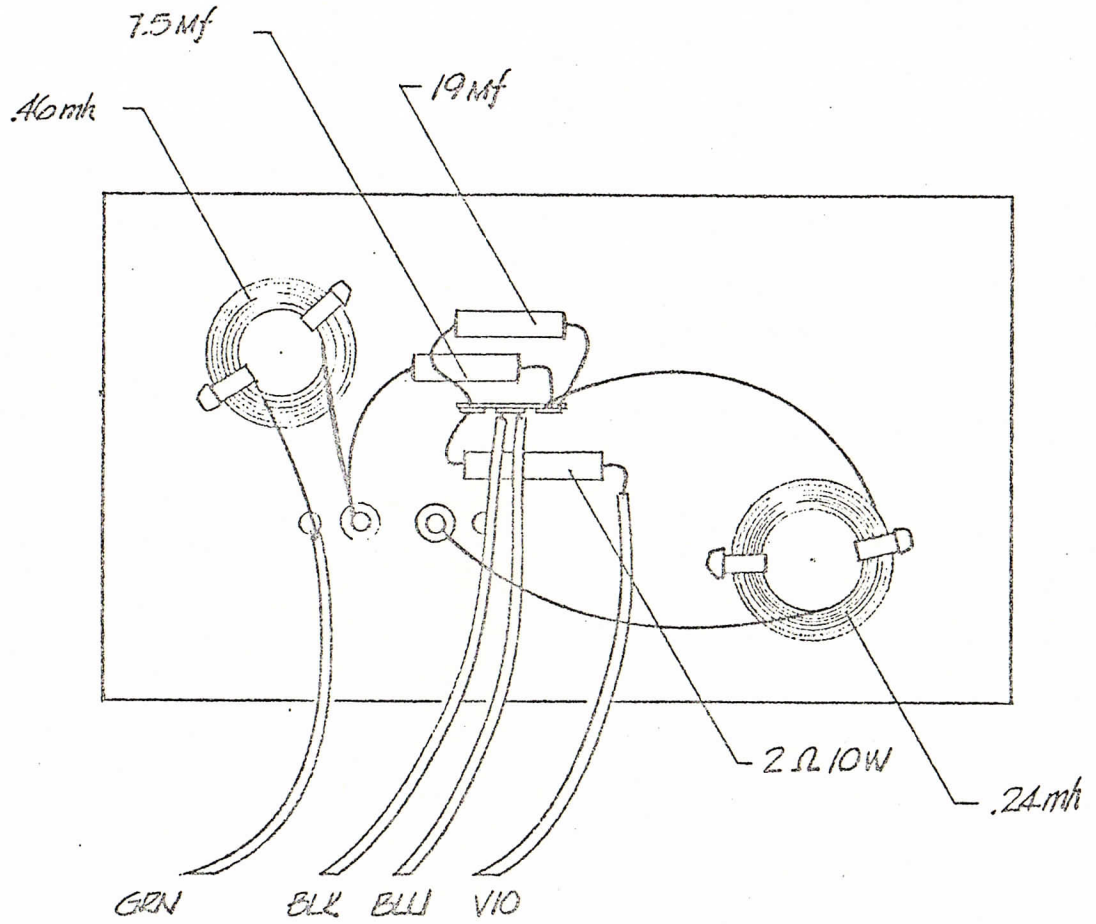


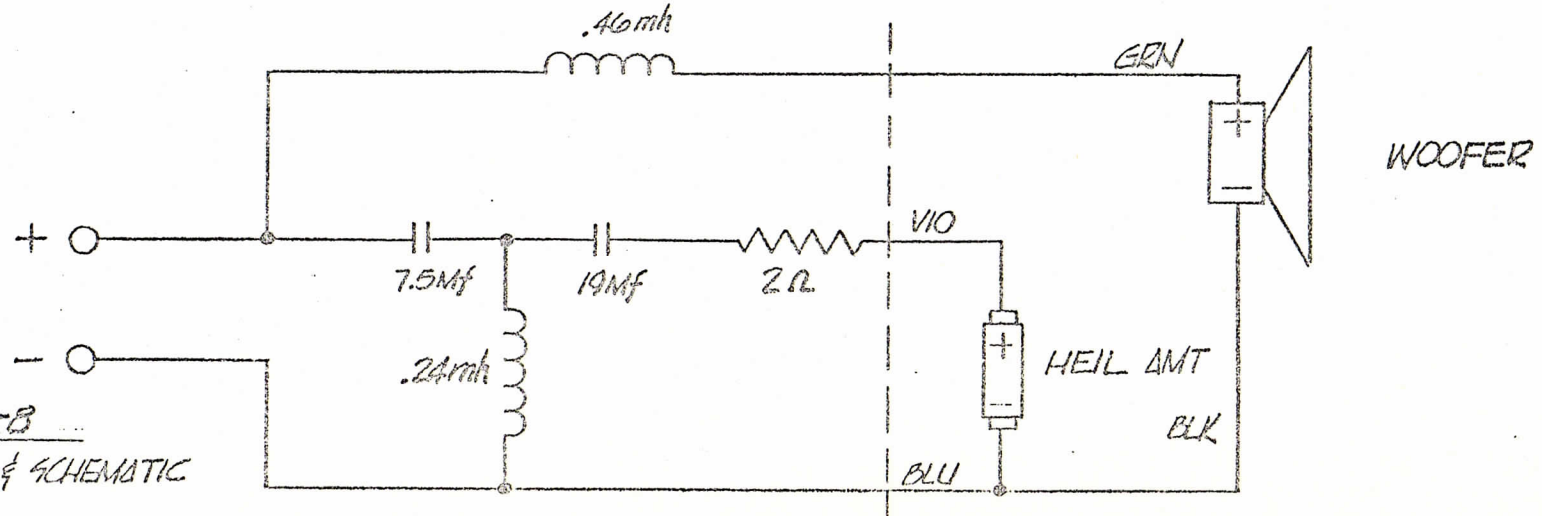


PERFORMANCE

ESS ~~TRANSPARENT~~ PS-B

CROSSOVER ASSEMBLY & SCHEMATIC

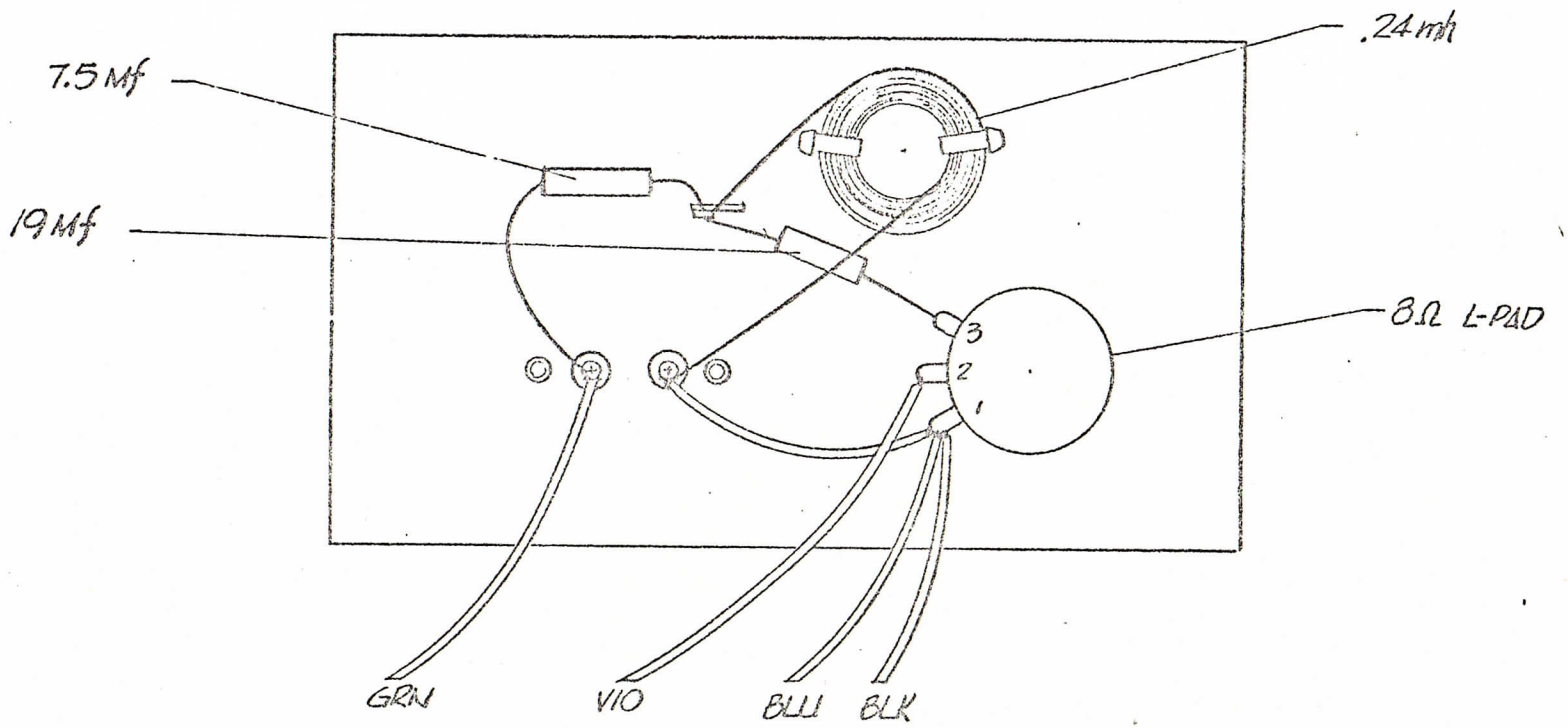


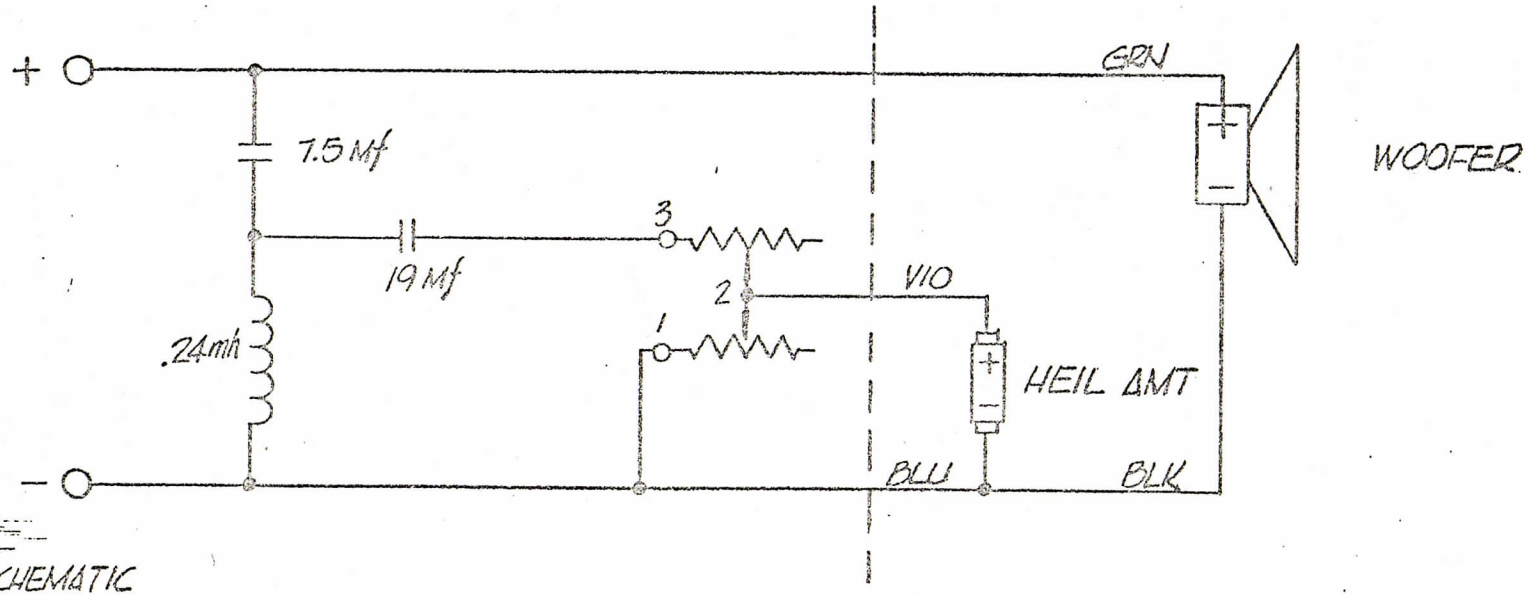


ESS TEMPEST LS-6

CROSSOVER ASSEMBLY & SCHEMATIC

695-1080

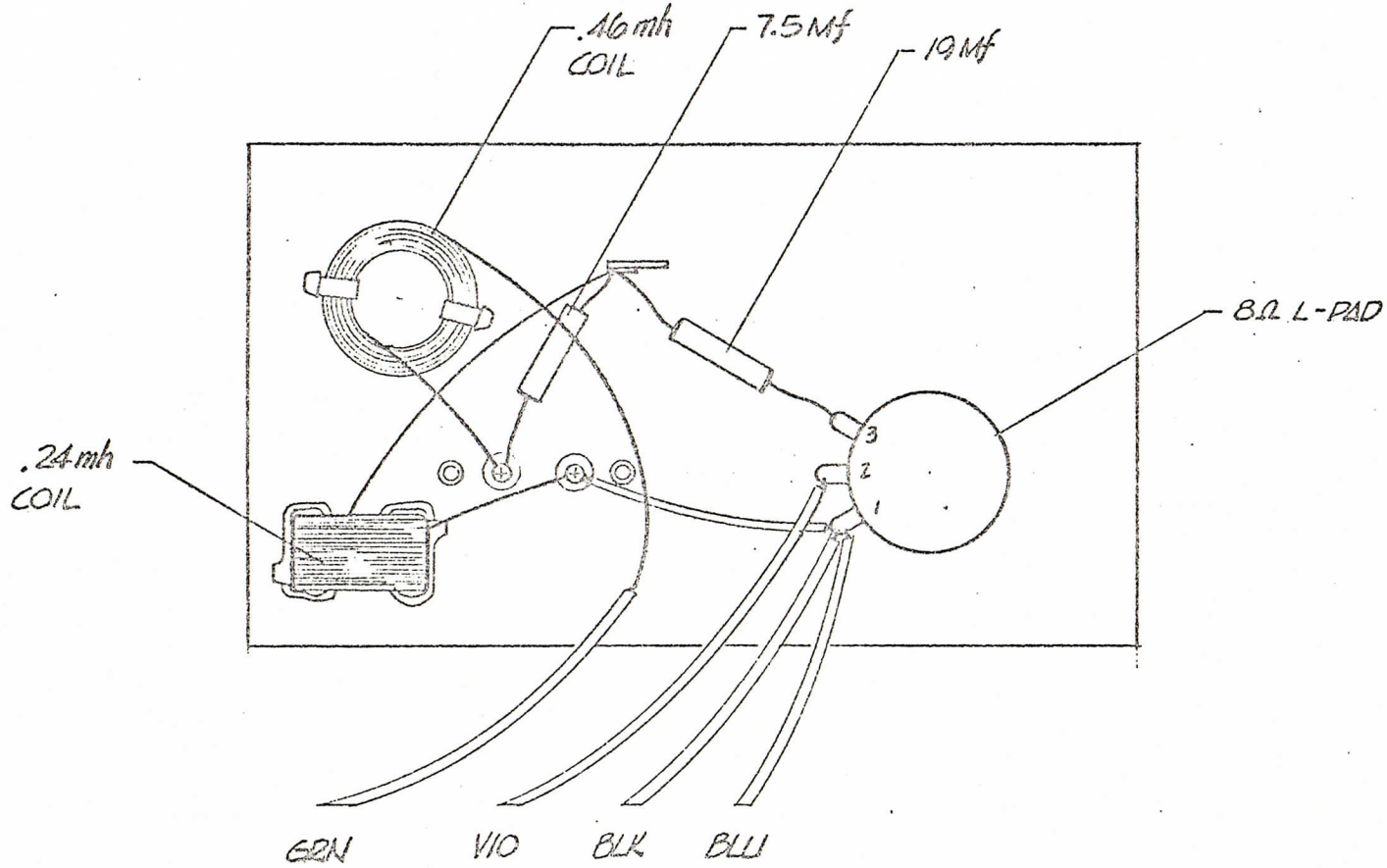


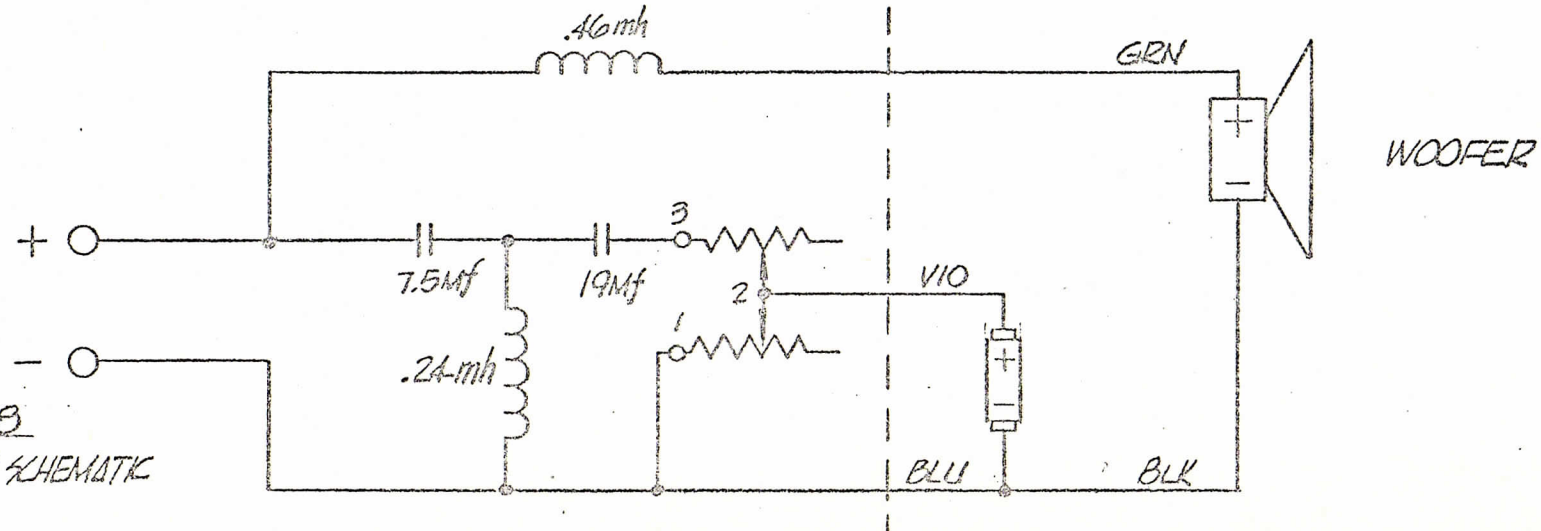


ESS TEMPEST LS-8

ROSSOVER ASSEMBLY & SCHEMATIC

695-1035

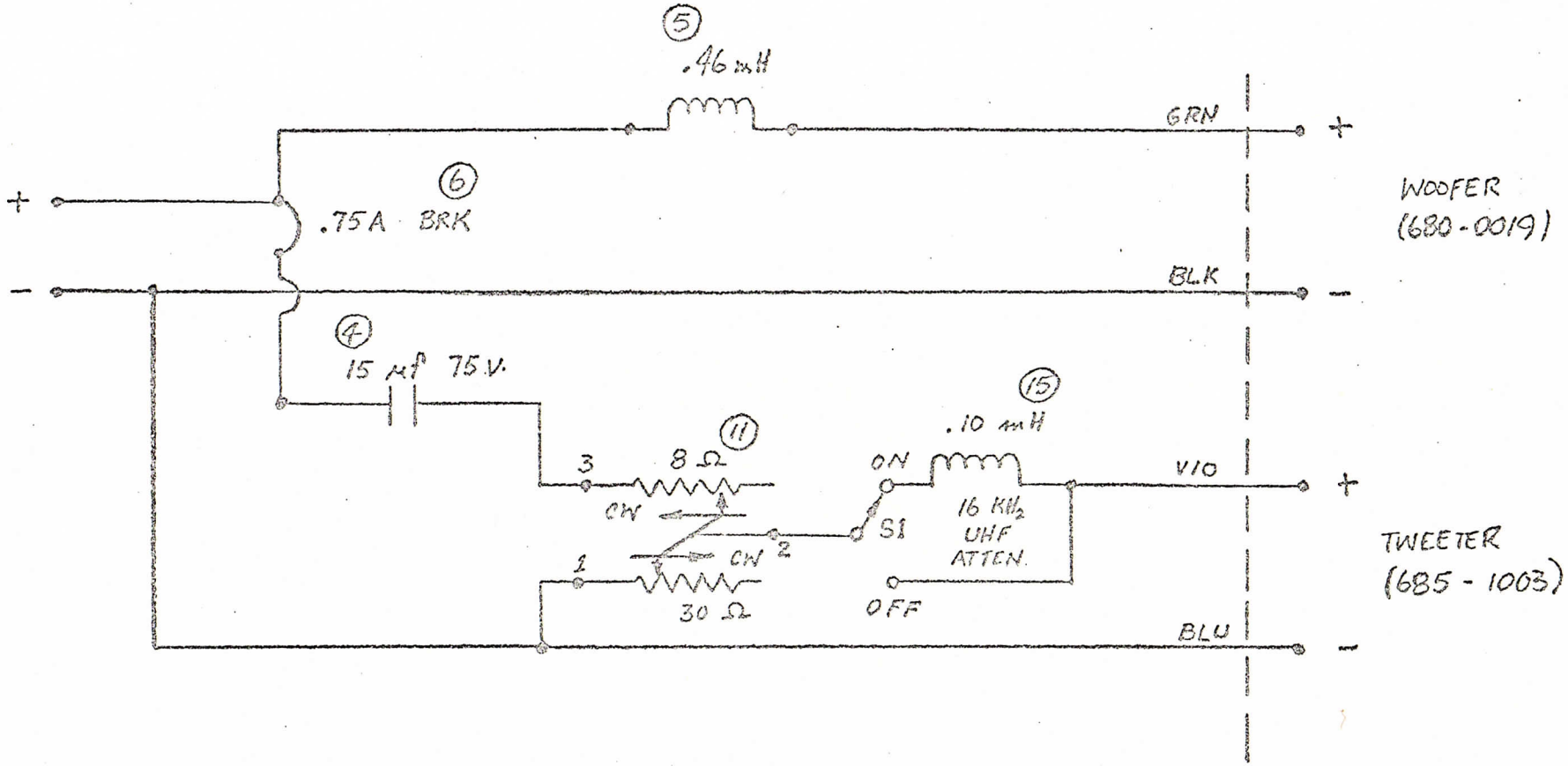


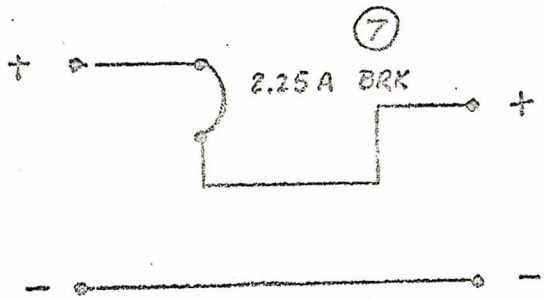


TEMPEST LAB SERIES I

BACK PLATE

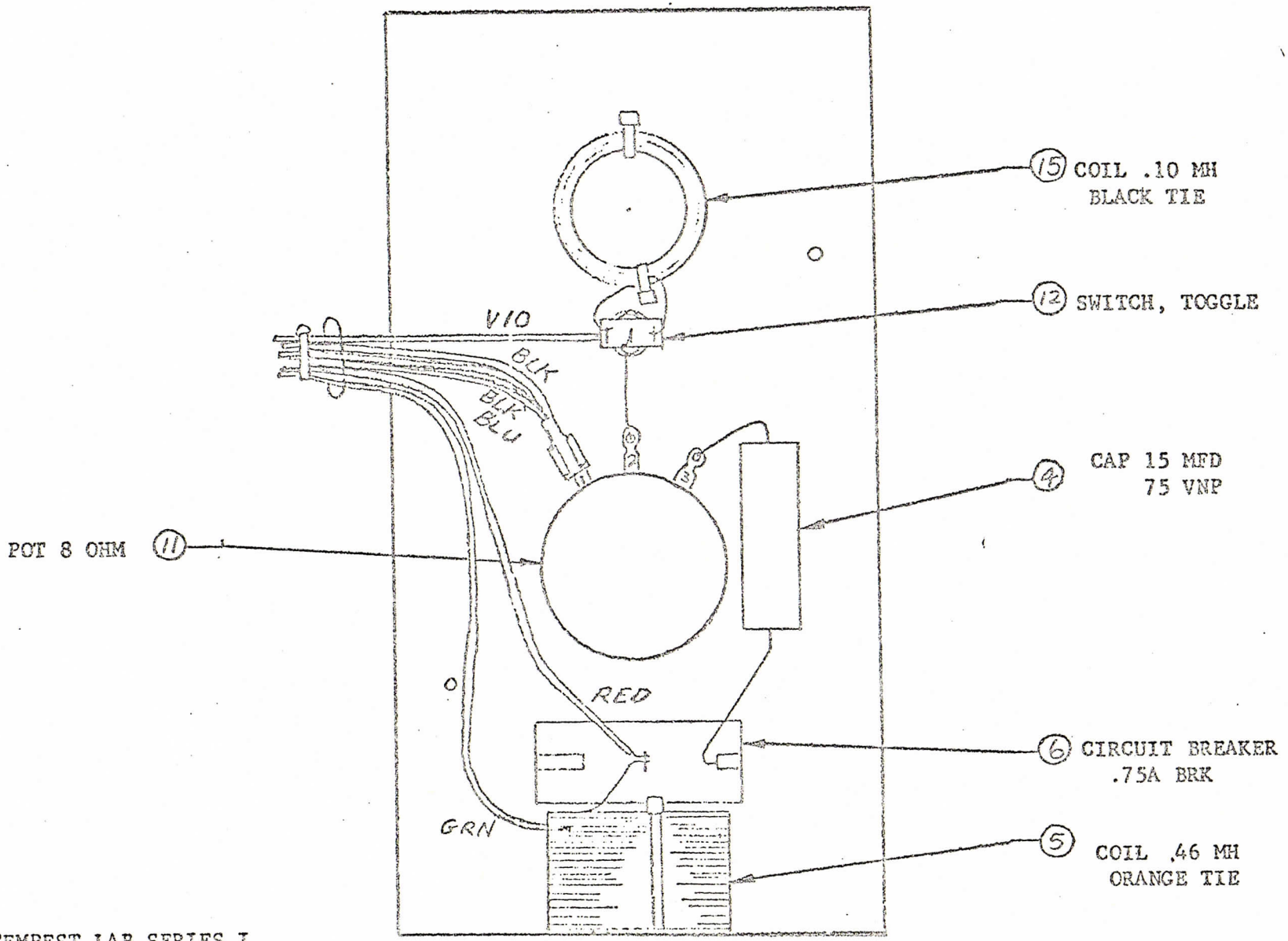


TEMPEST LAB SERIES I

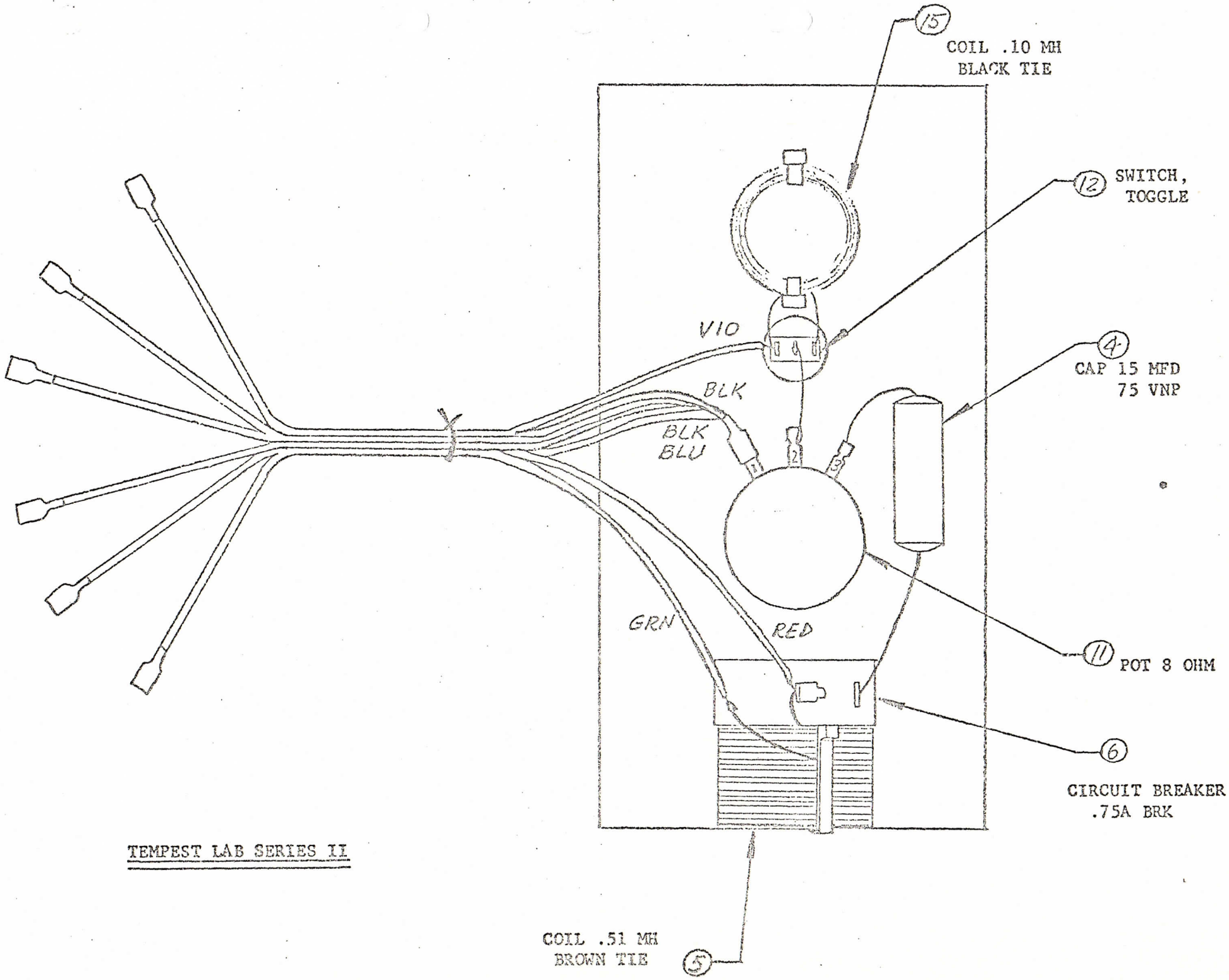


TEMPEST LAB SERIES II

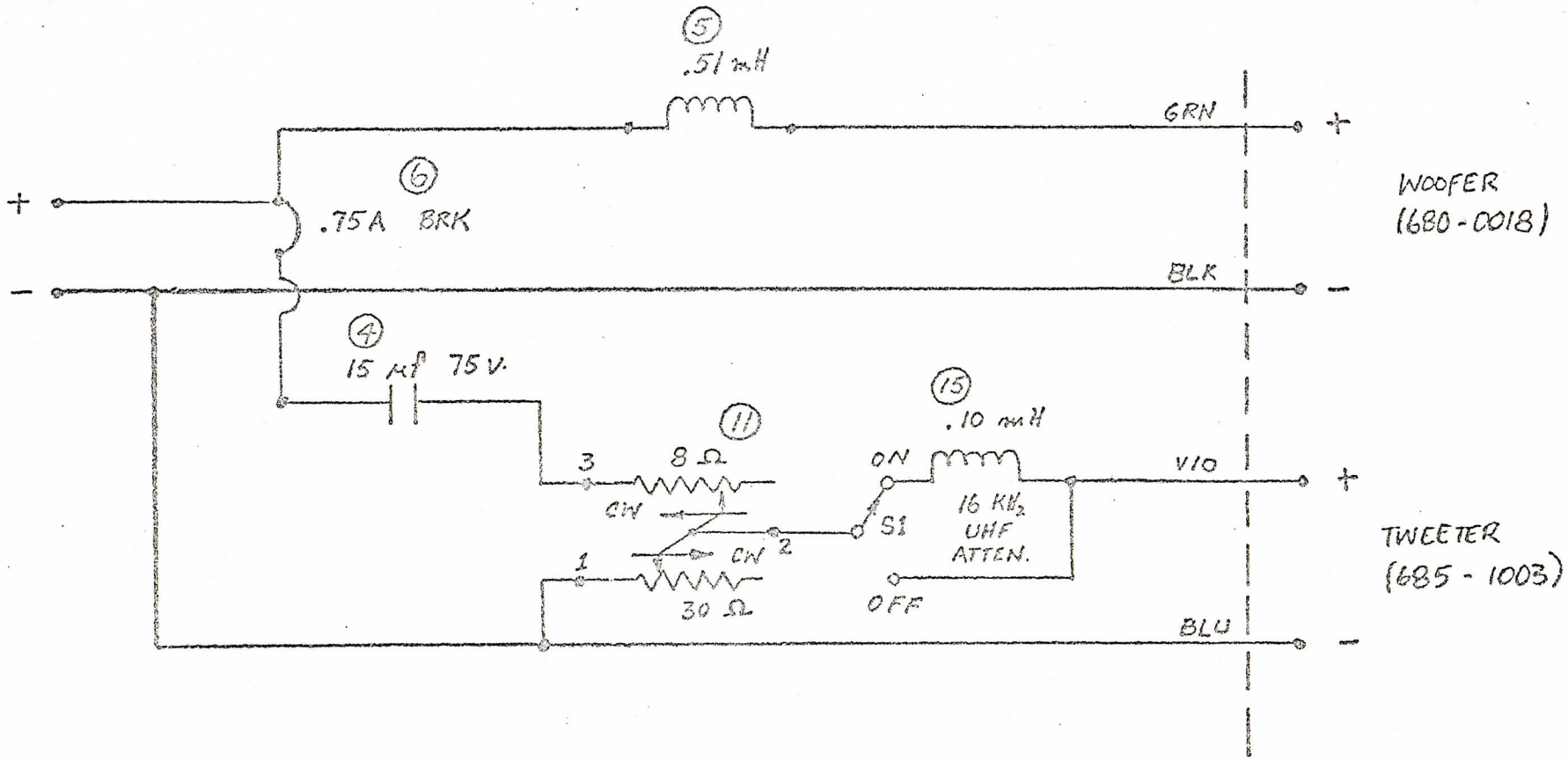


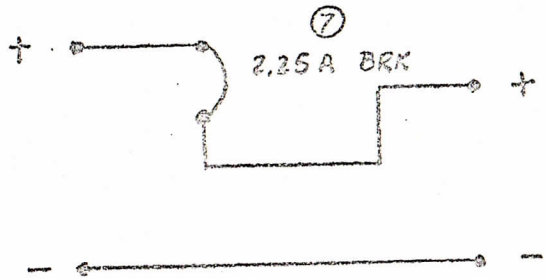


TEMPEST LAB SERIES II

BACK PLATE

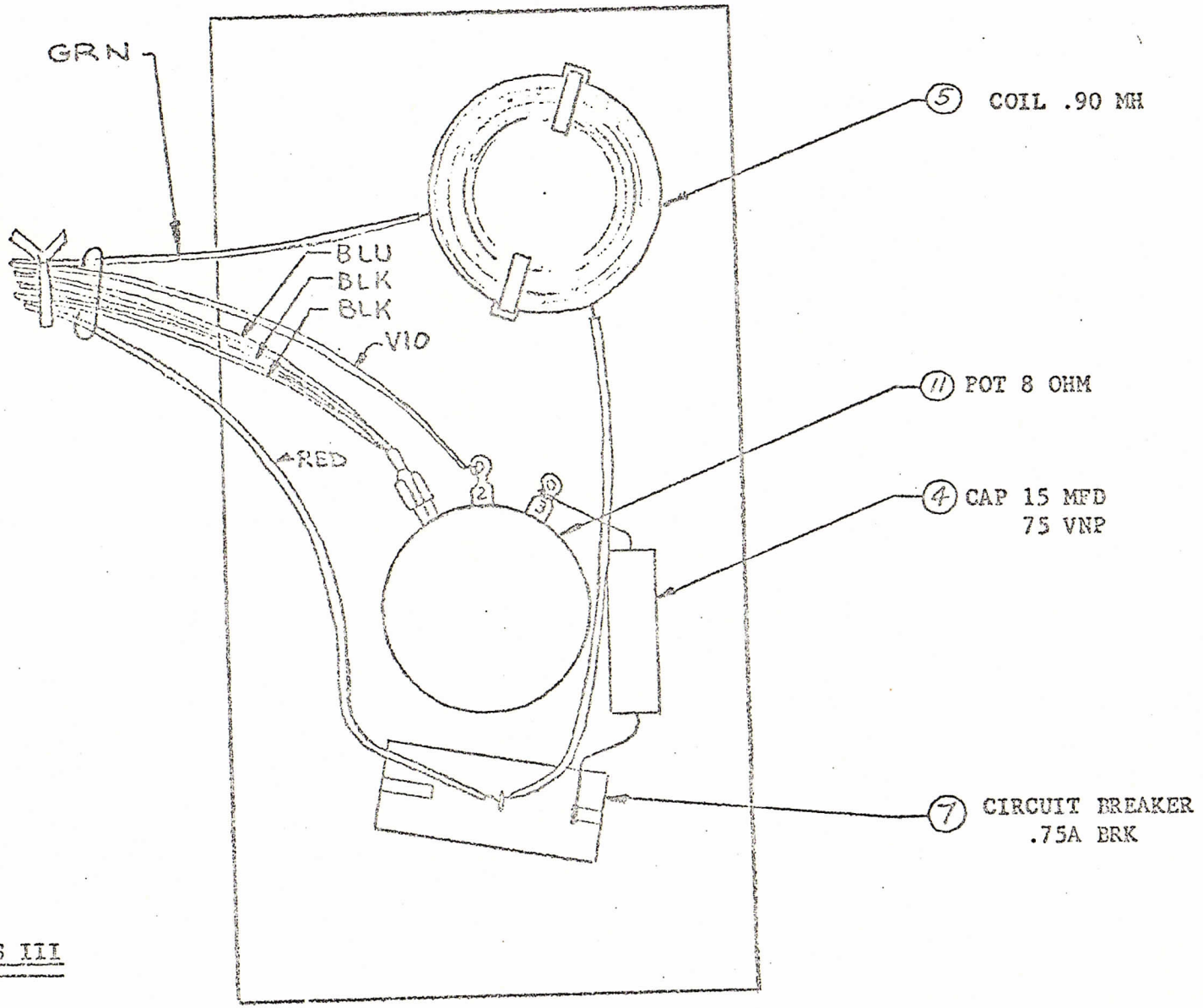


TEMPEST LAB SERIES III

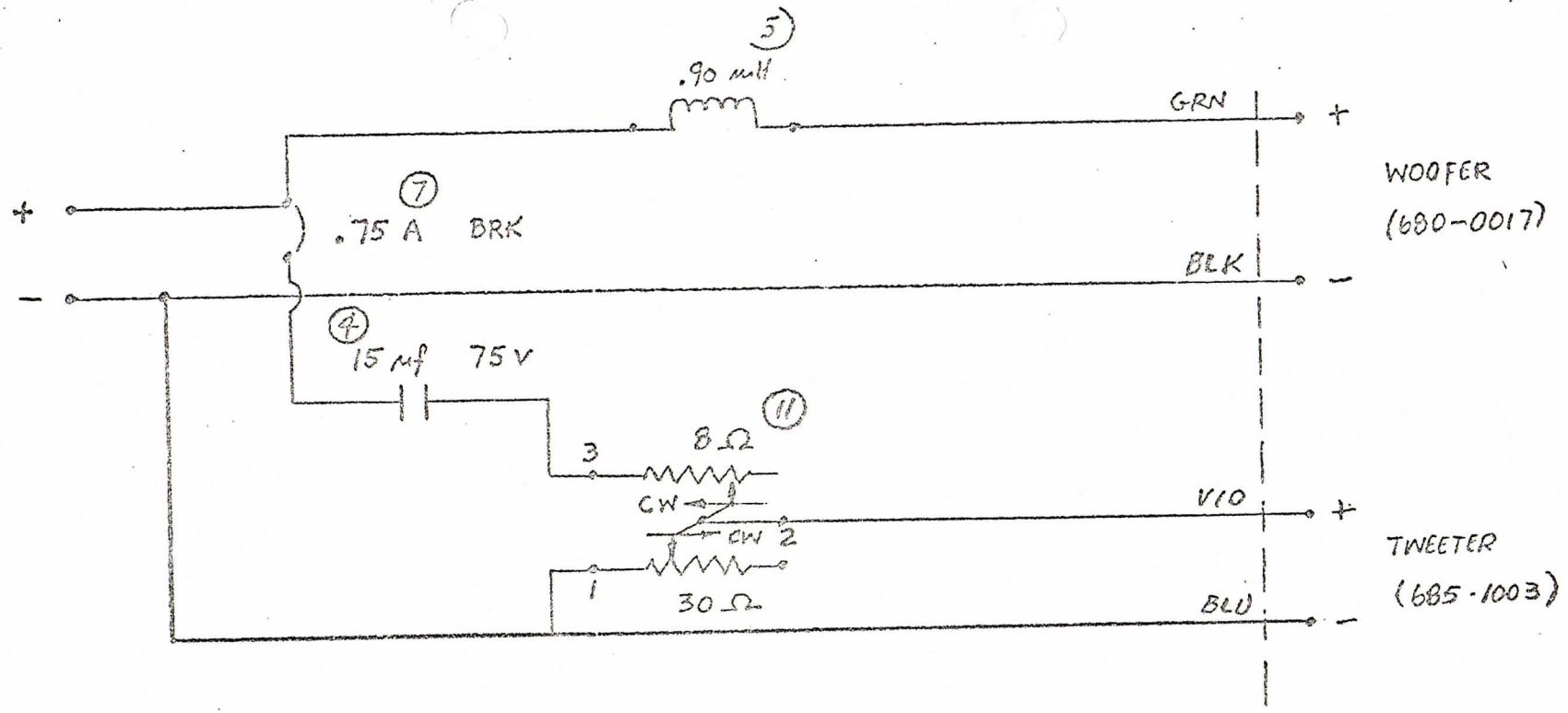


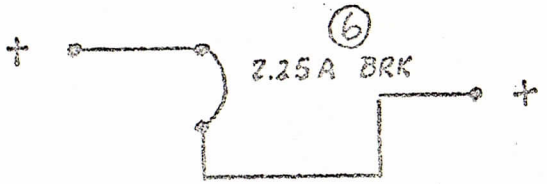


TEMPEST LAB SERIES III

BACK PLATE

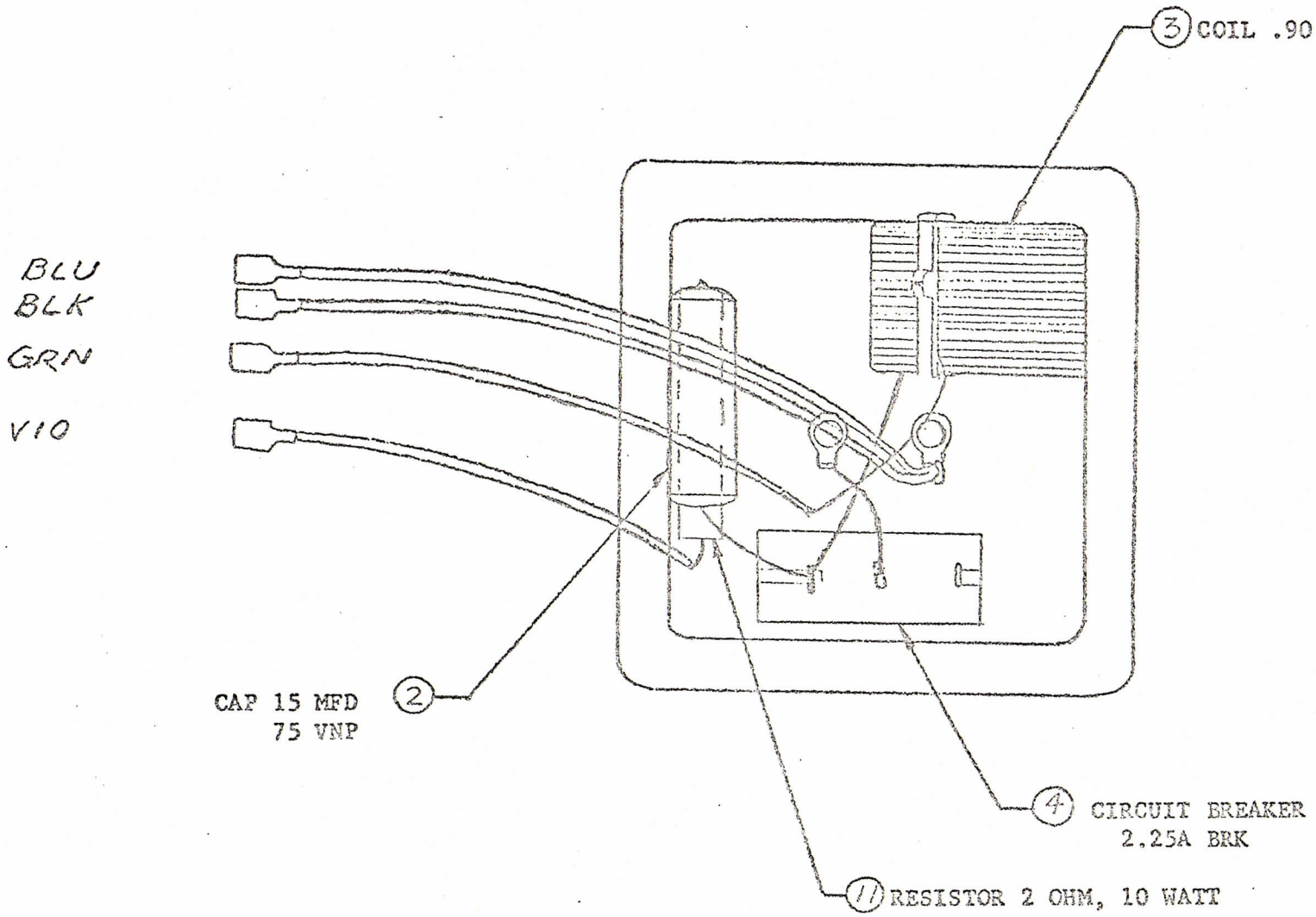


TEMPEST LAB SERIES III E

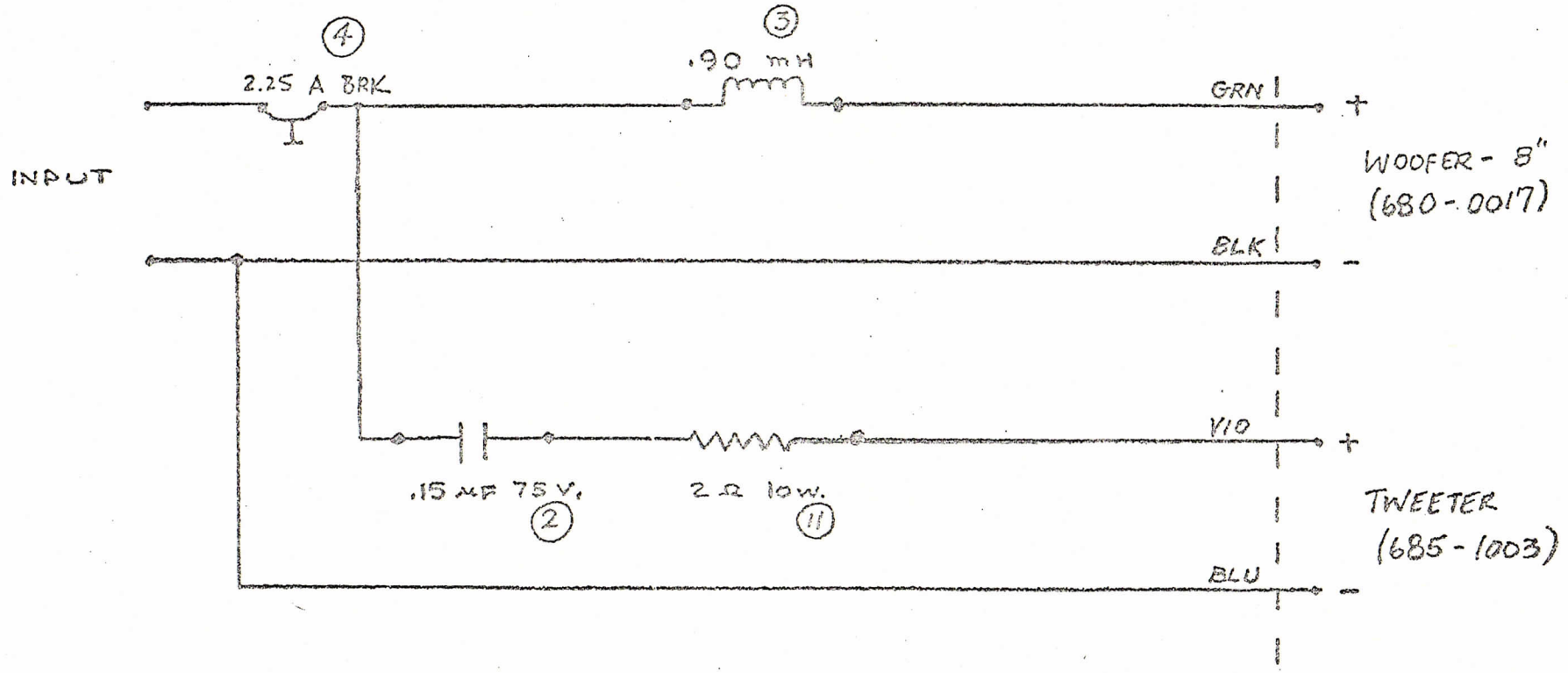


TEMPEST LAB SERIES III E

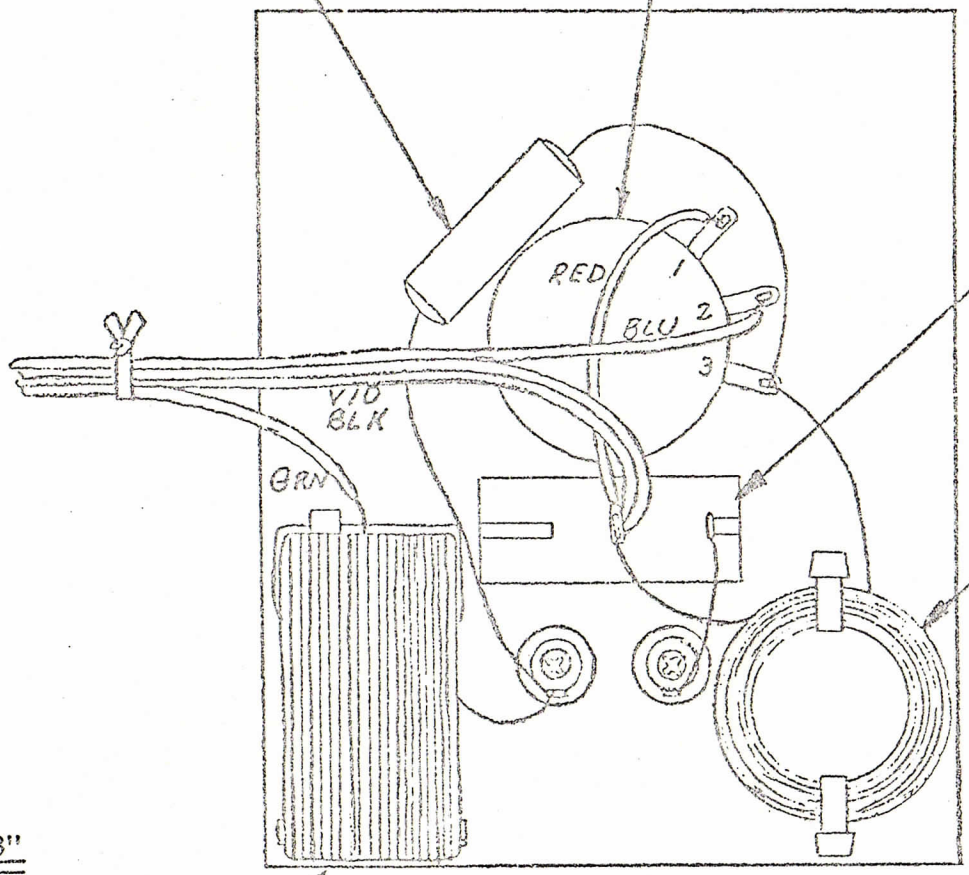


(8) CAP 15 MFD
75 VNP

(16) POT 8 OHM

(13) CIRCUIT BREAKER
2.25A BRK

(10) COIL .53 MH
TWO GREY TIES

FORTURA PEDESTAL 8"

COIL .83 MH
TWO BLUE TIES (9)

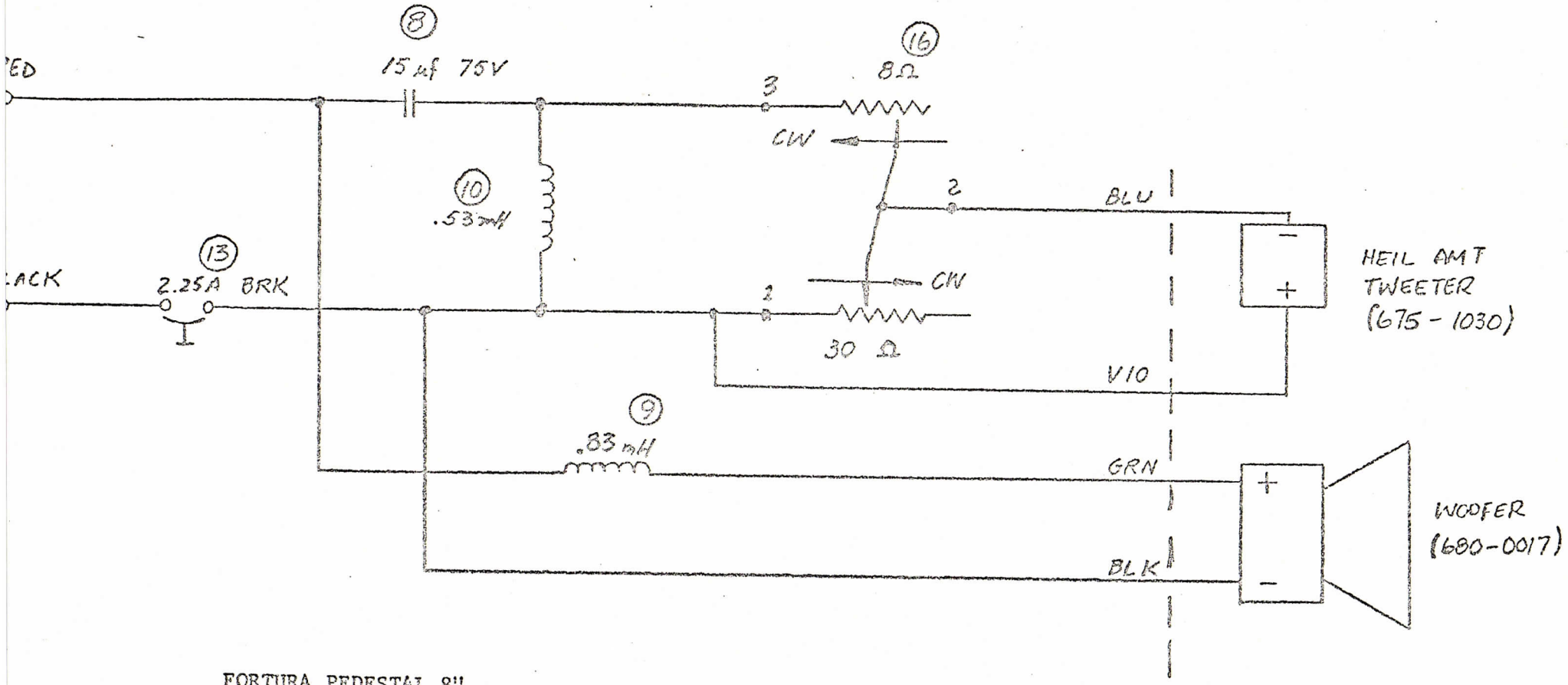


FORTURA PEDESTAL 8"

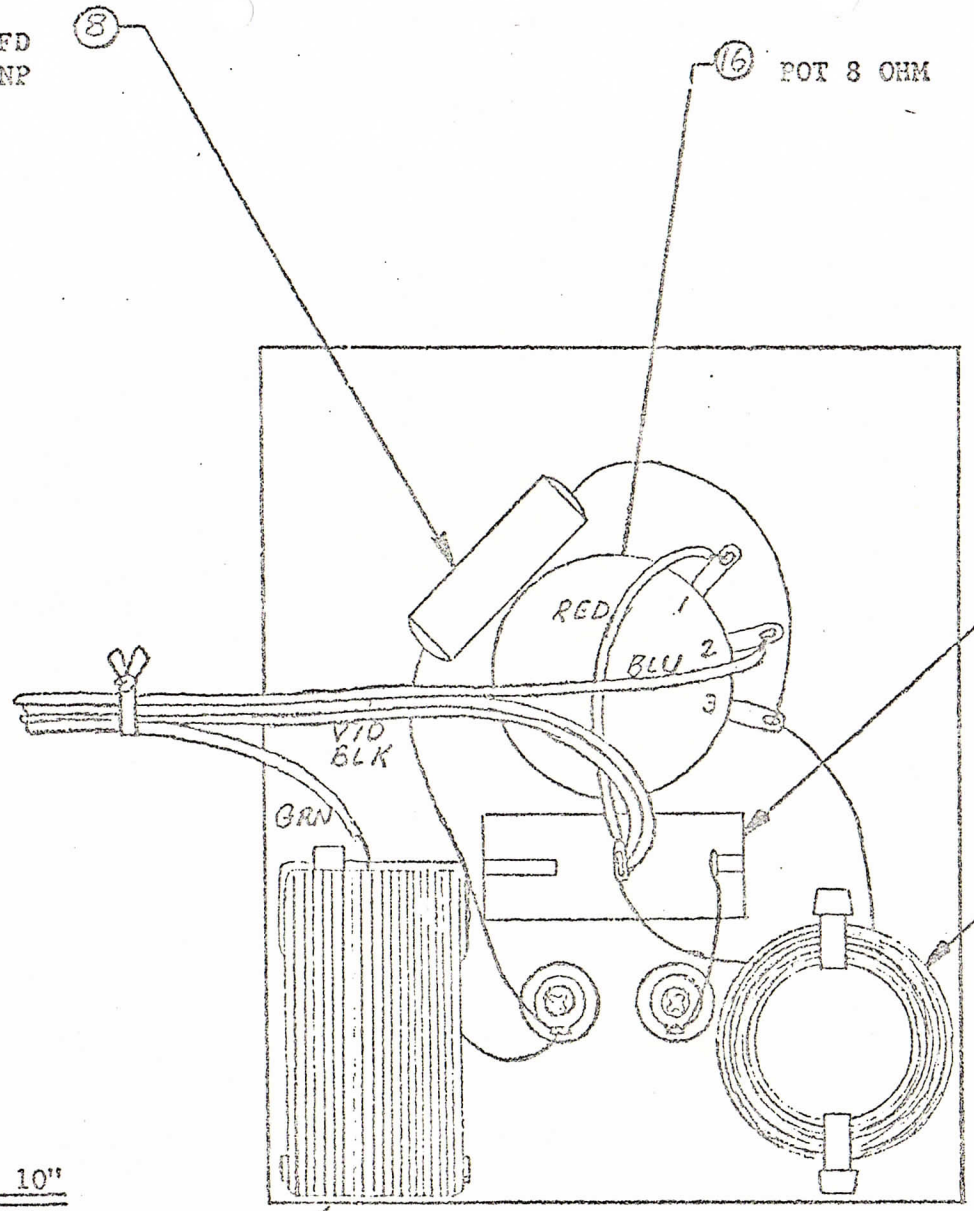


(8) CAP 15 MFD
75 VNP

(16) POT 8 OHM

(13) CIRCUIT BREAKER
2.25A BRK

(10) COIL .53 MH
TWO GREY TIES

FORTURA PEDESTAL 10"

COIL 1.2 MH
TWO YELLOW TIES (9)

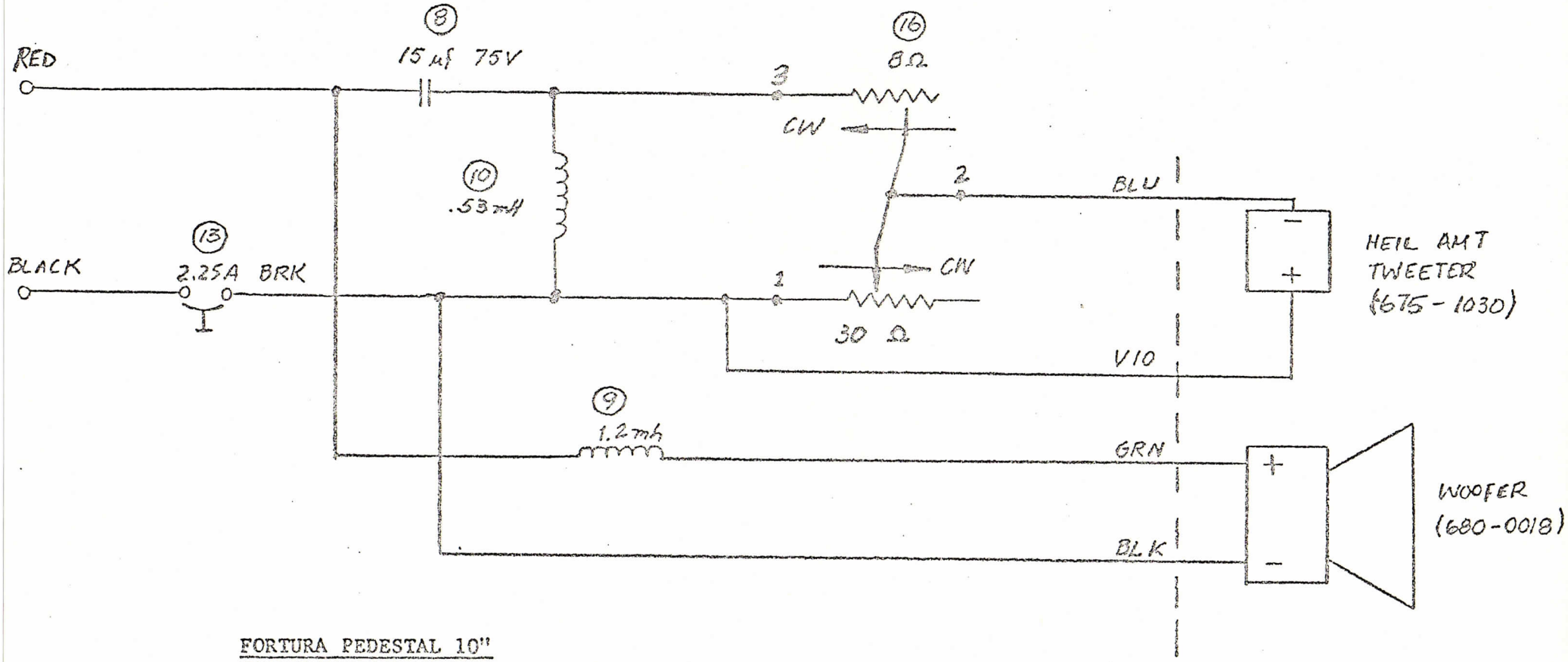


FORTURA PEDESTAL 10"

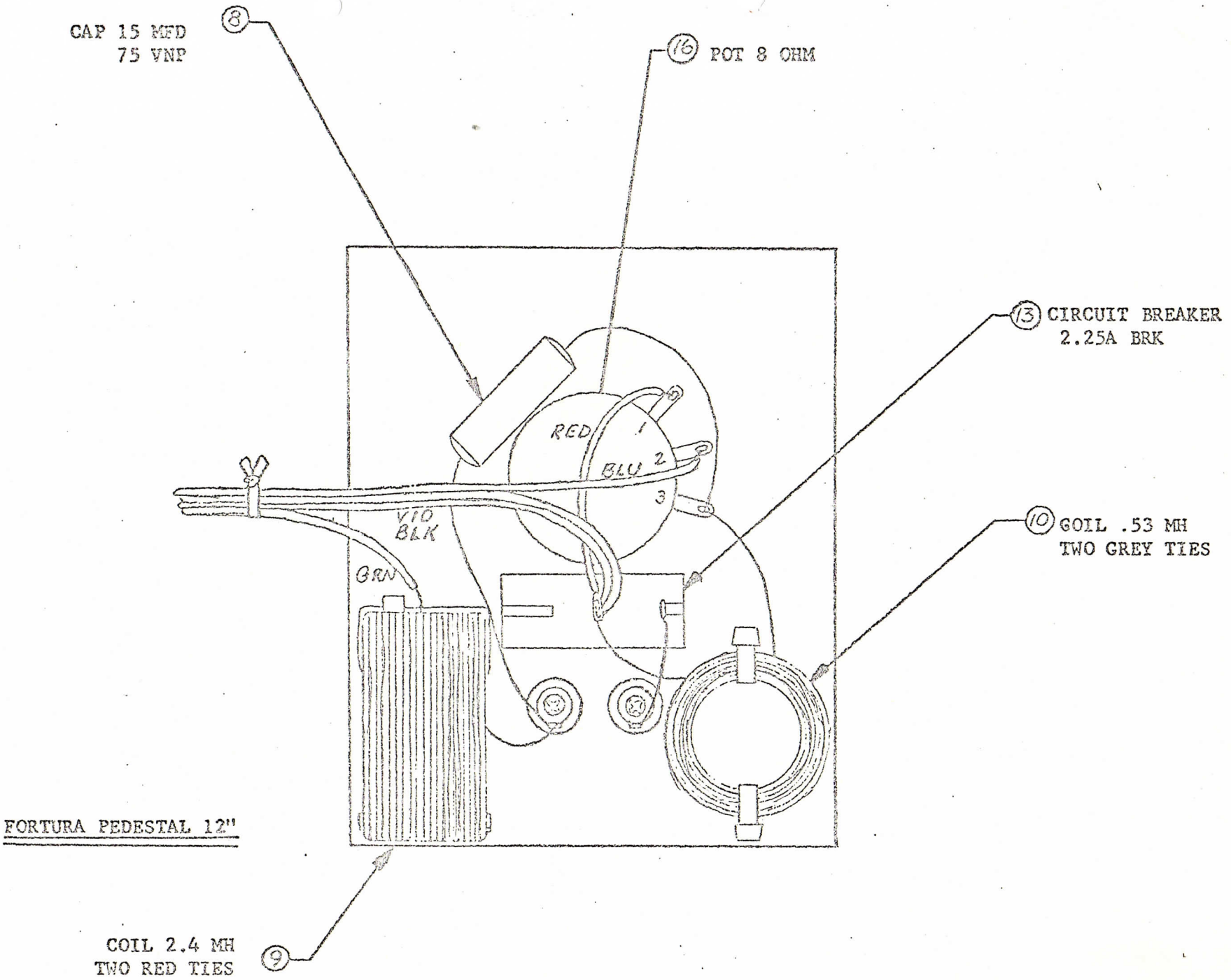


FORTURA PEDESTAL 12"

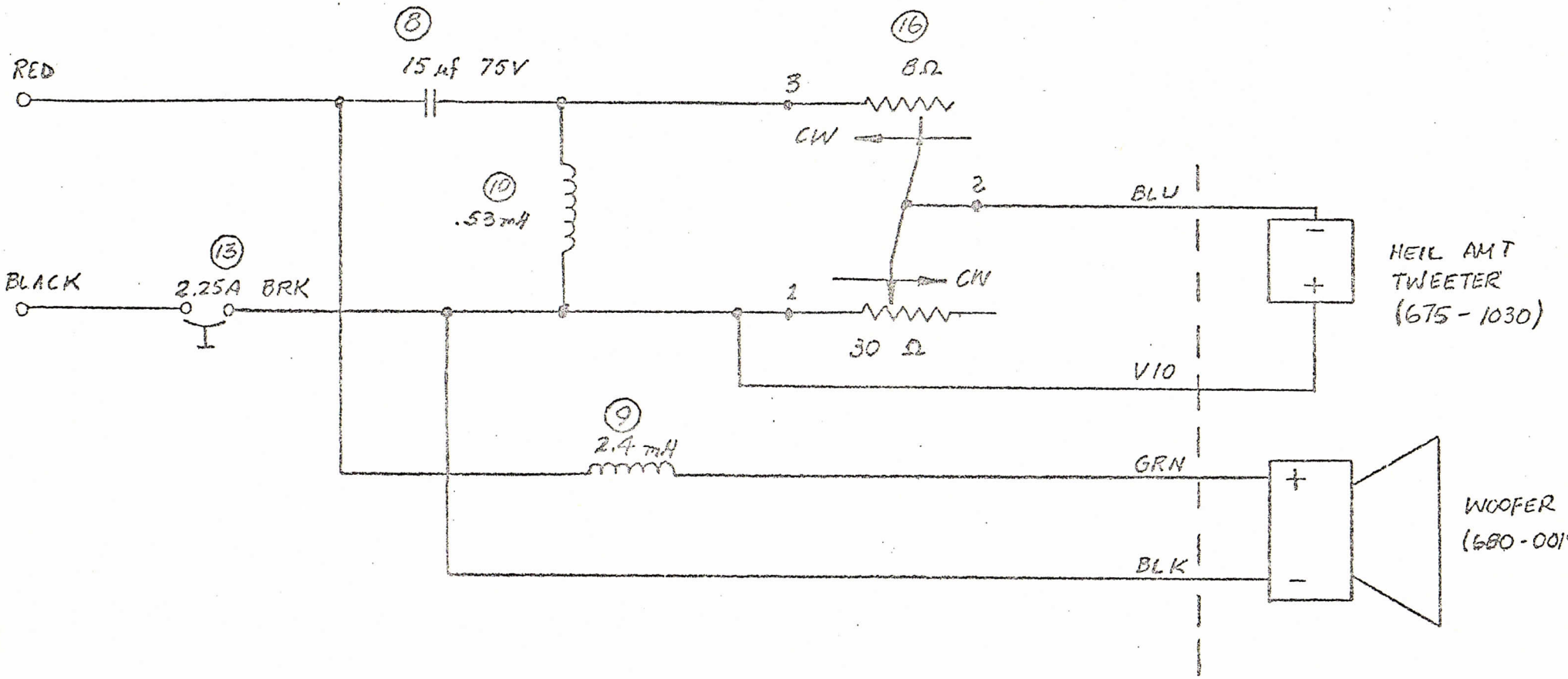


FORTURA PEDESTAL 12"

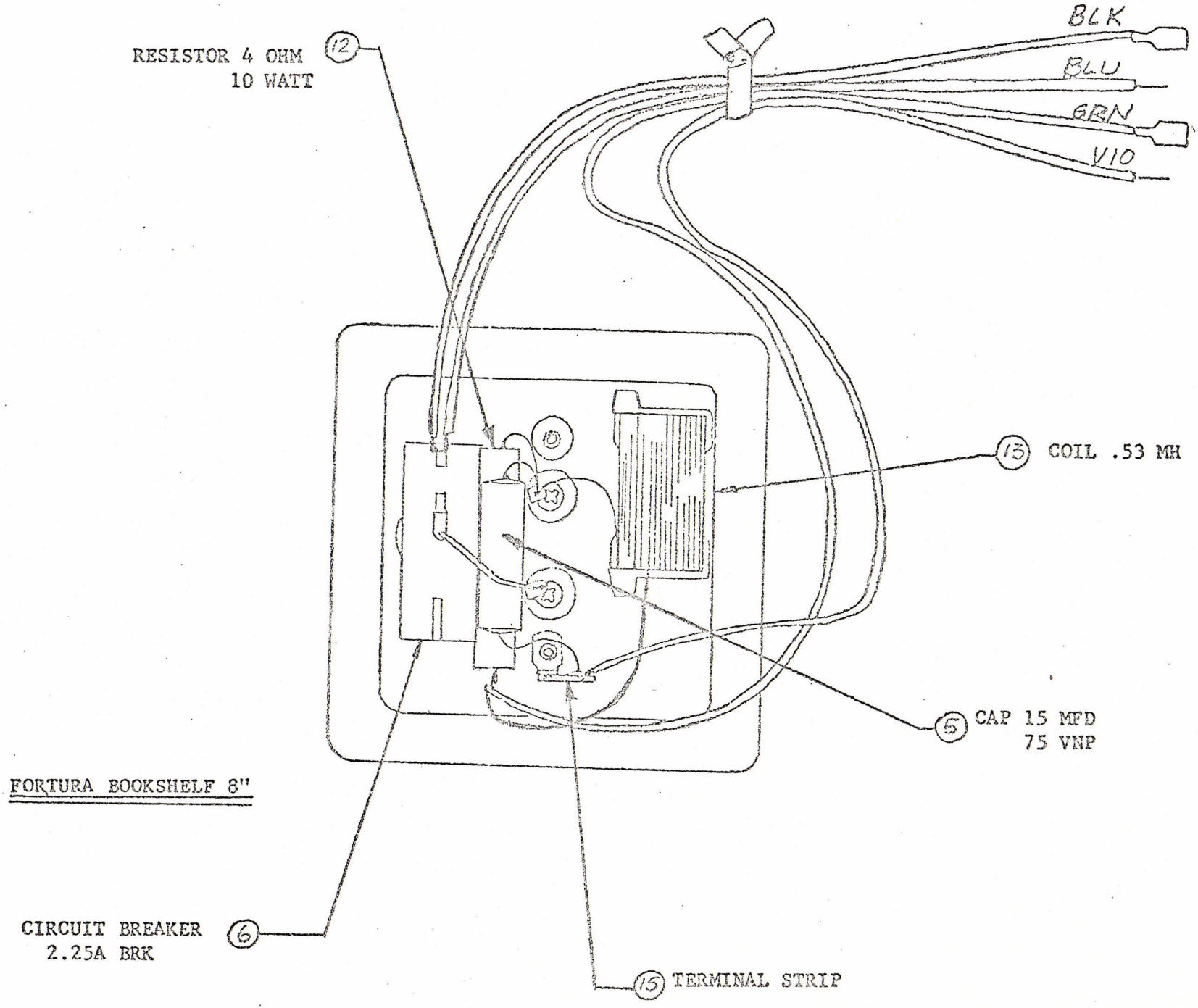
RESISTOR 4 OHM
10 WATT
12
BLK
BLU
GRN
VIO
13
COIL .53 MH
5
CAP 15 MFD
75 VNP
FORTURA BOOKSHELF 8"
CIRCUIT BREAKER
2.25A BRK
6
15
TERMINAL STRIP

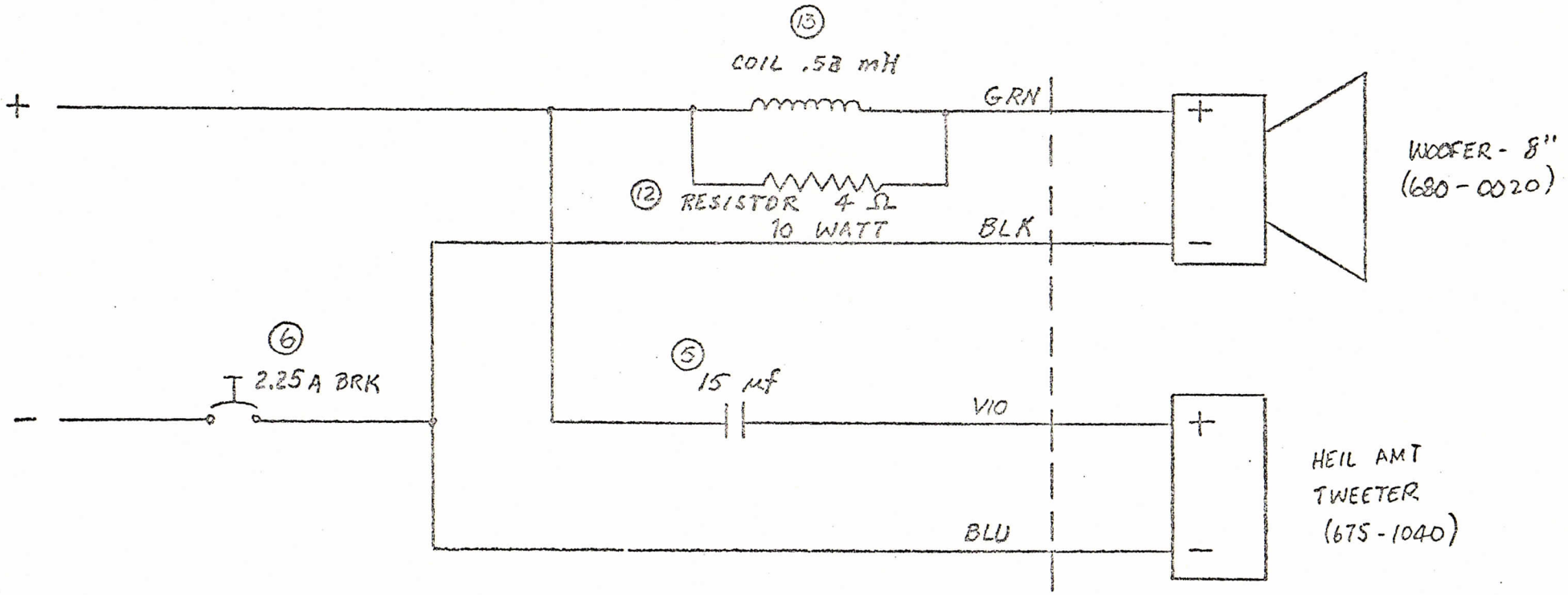


FORTURA BOOKSHELF 8"

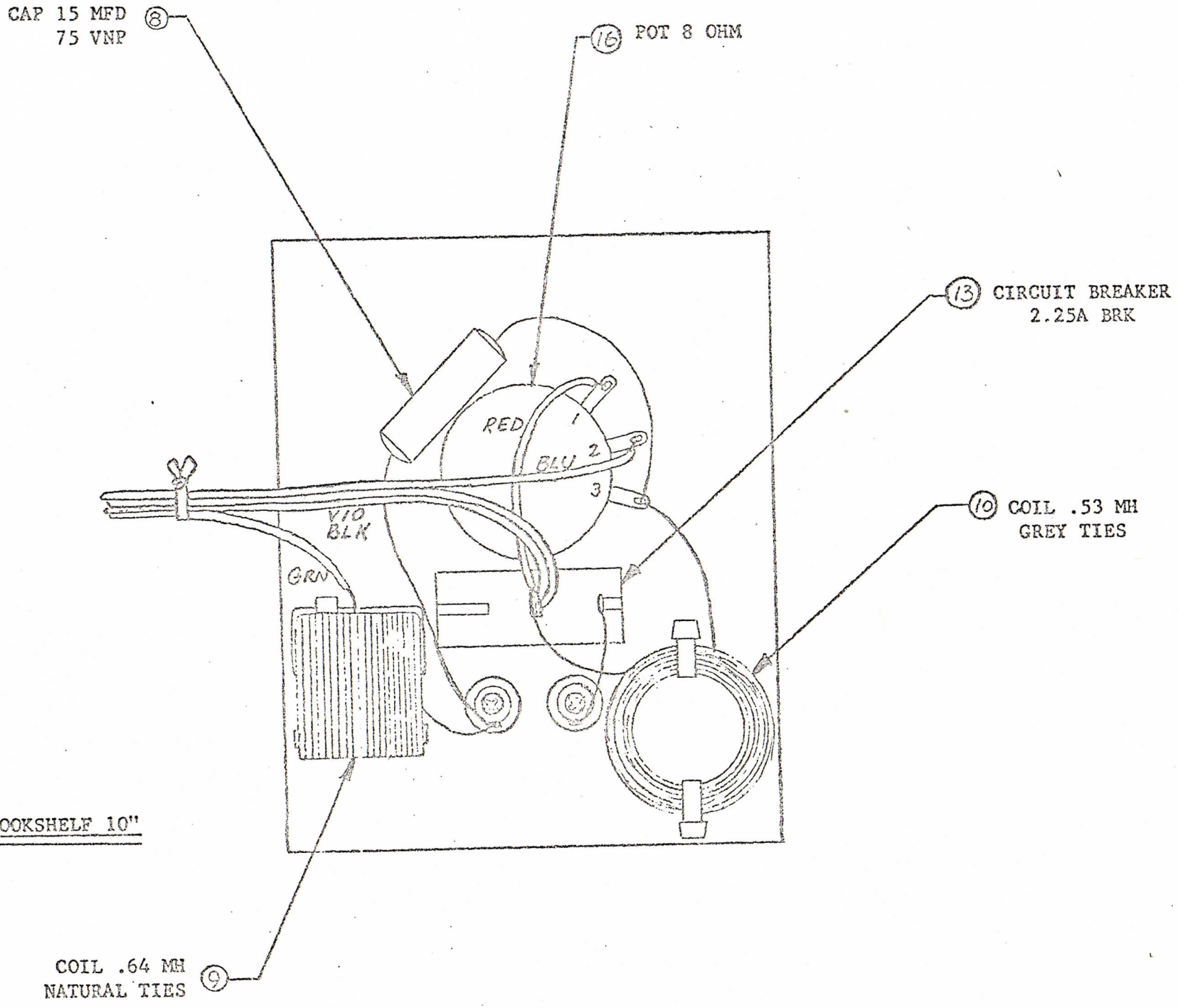


FORTURA BOOKSHELF 10"

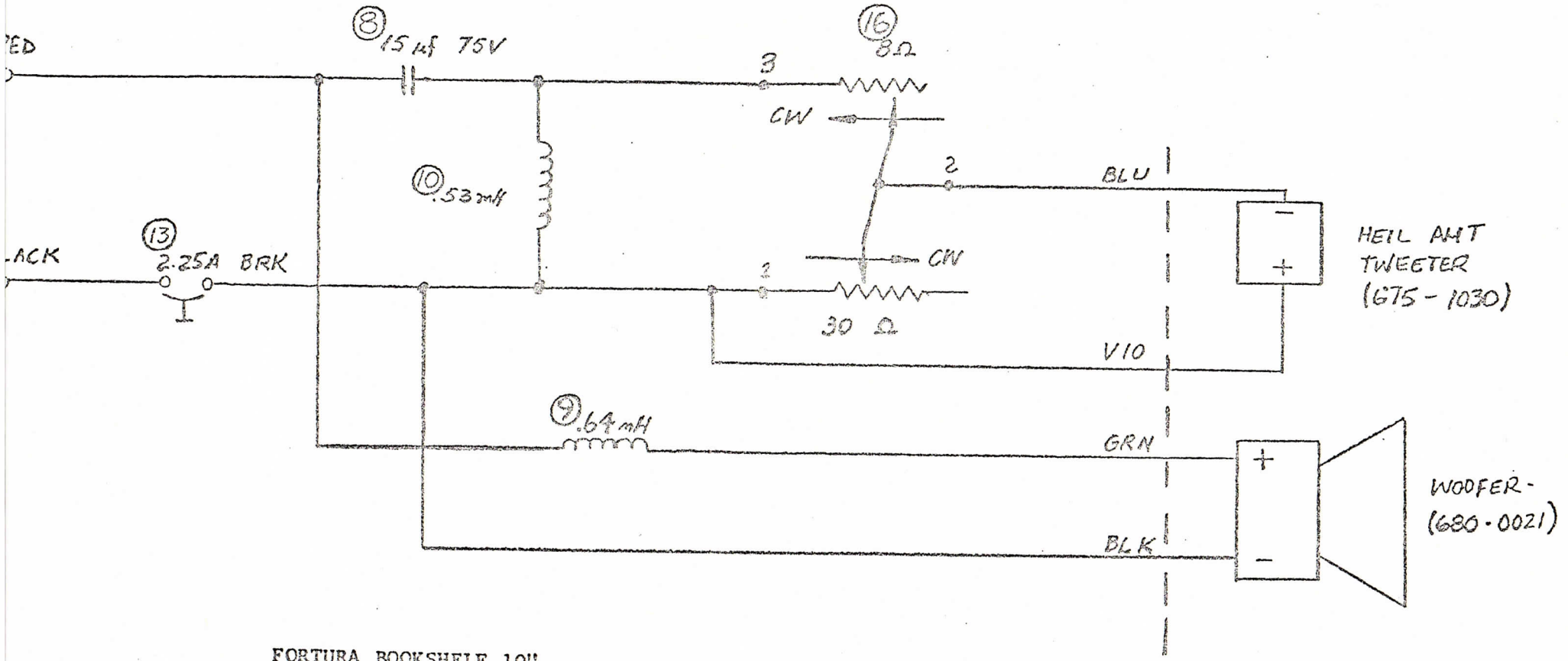


FORTURA BOOKSHELF 10"

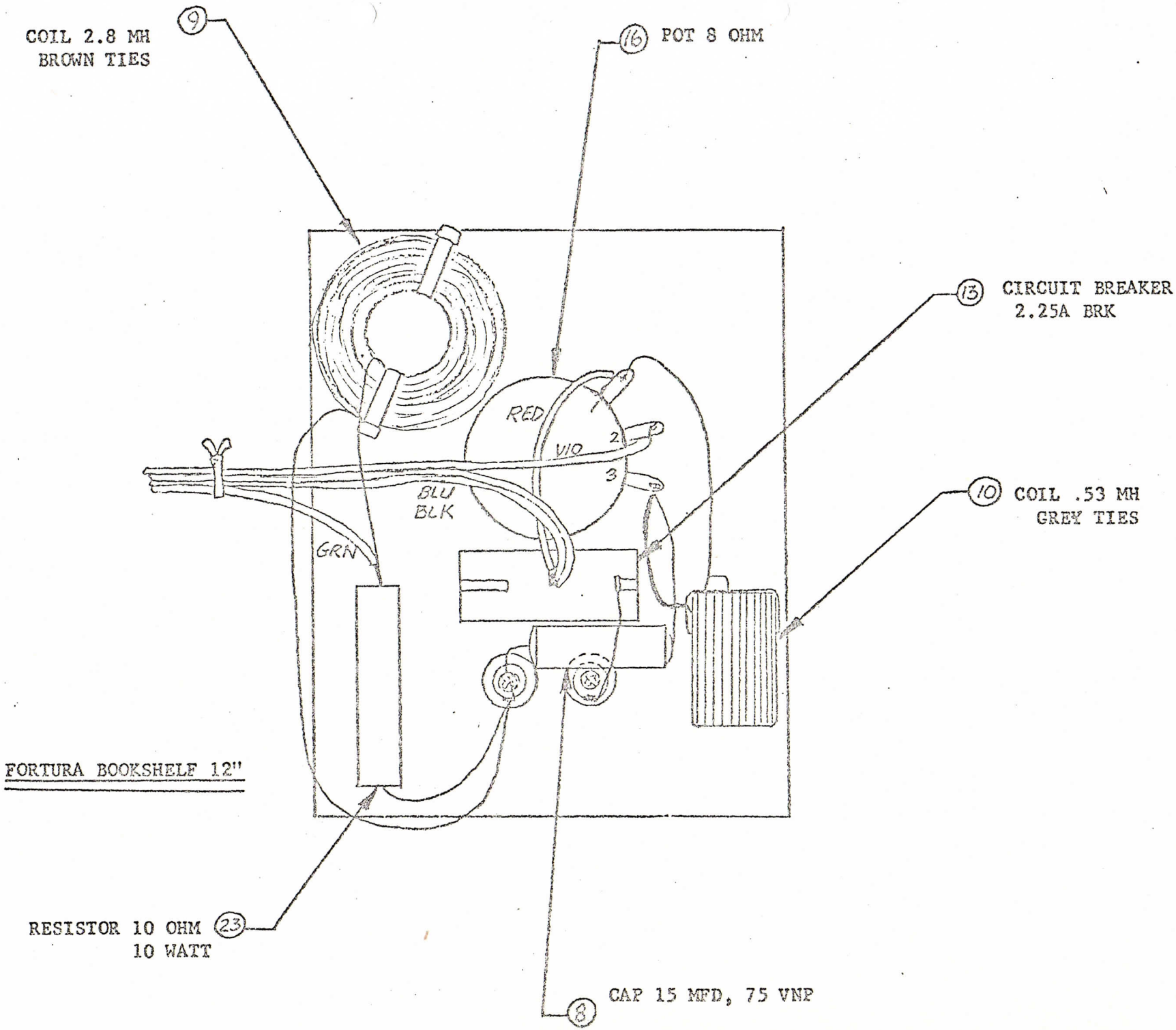
COIL 2.8 MH
BROWN TIES
9
16
POT 8 OHM
13
CIRCUIT BREAKER
2.25A BRK
10
COIL .53 MH
GREY TIES
RED
VIO
BLU
BLK
GRN
1
2
3
FORTURA BOOKSHELF 12"
RESISTOR 10 OHM
10 WATT
23
8
CAP 15 MFD, 75 VNP

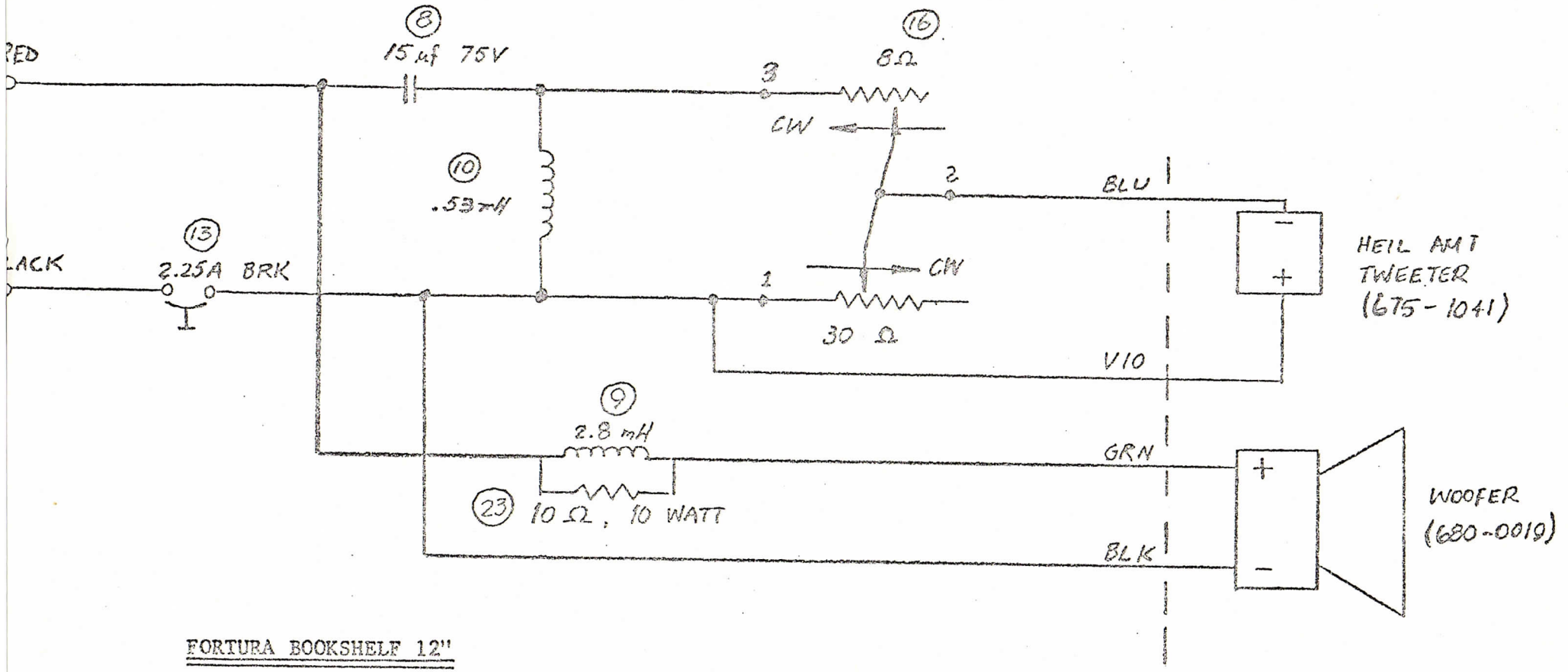


FORTURA BOOKSHELF 12"

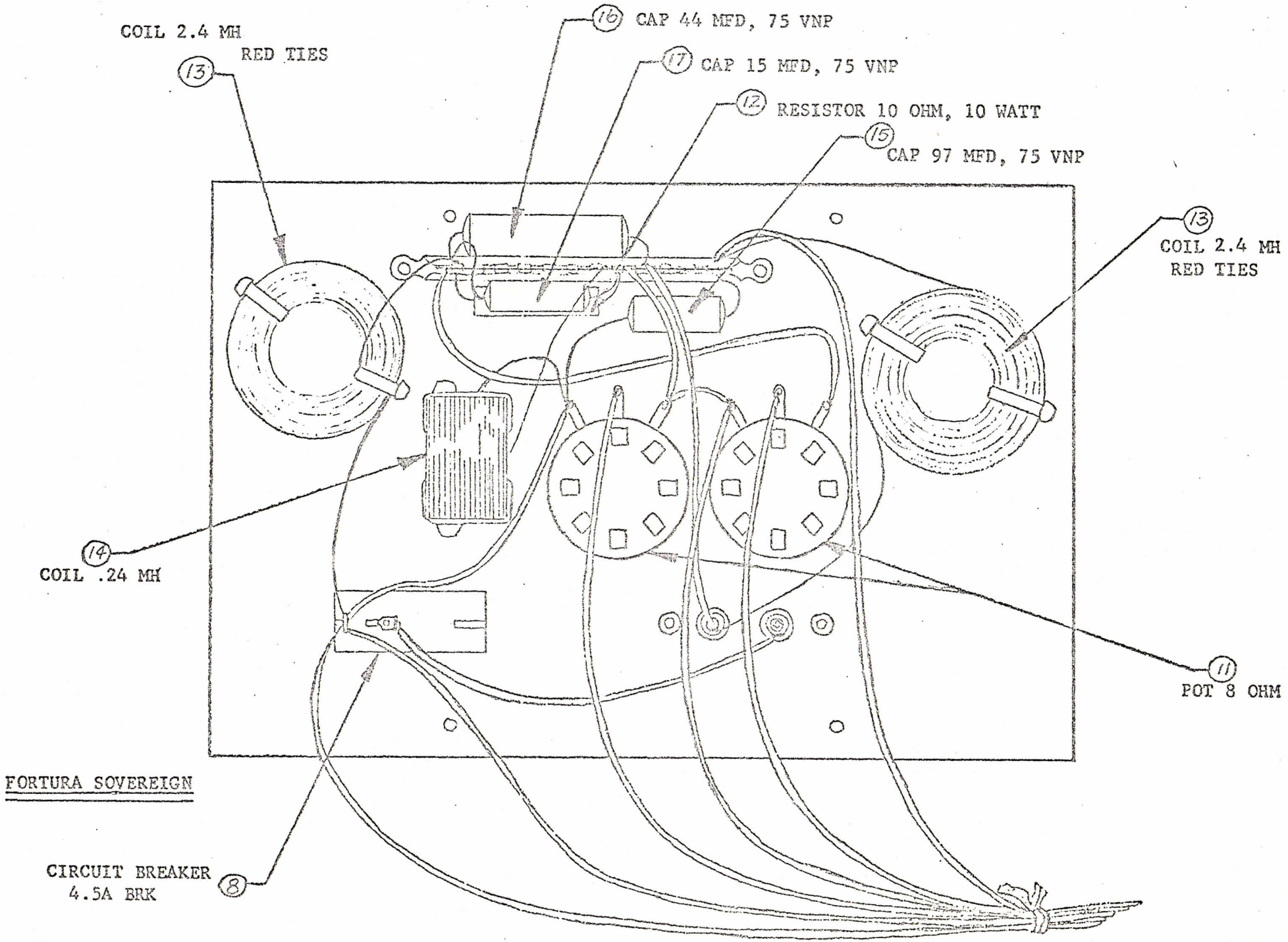
COIL 2.4 MH
RED TIES
13
16 CAP 44 MFD, 75 VNP
17 CAP 15 MFD, 75 VNP
12 RESISTOR 10 OHM, 10 WATT
15 CAP 97 MFD, 75 VNP
13 COIL 2.4 MH
RED TIES
14 COIL .24 MH
11 POT 8 OHM
FORTURA SOVEREIGN
CIRCUIT BREAKER
4.5A BRK
8

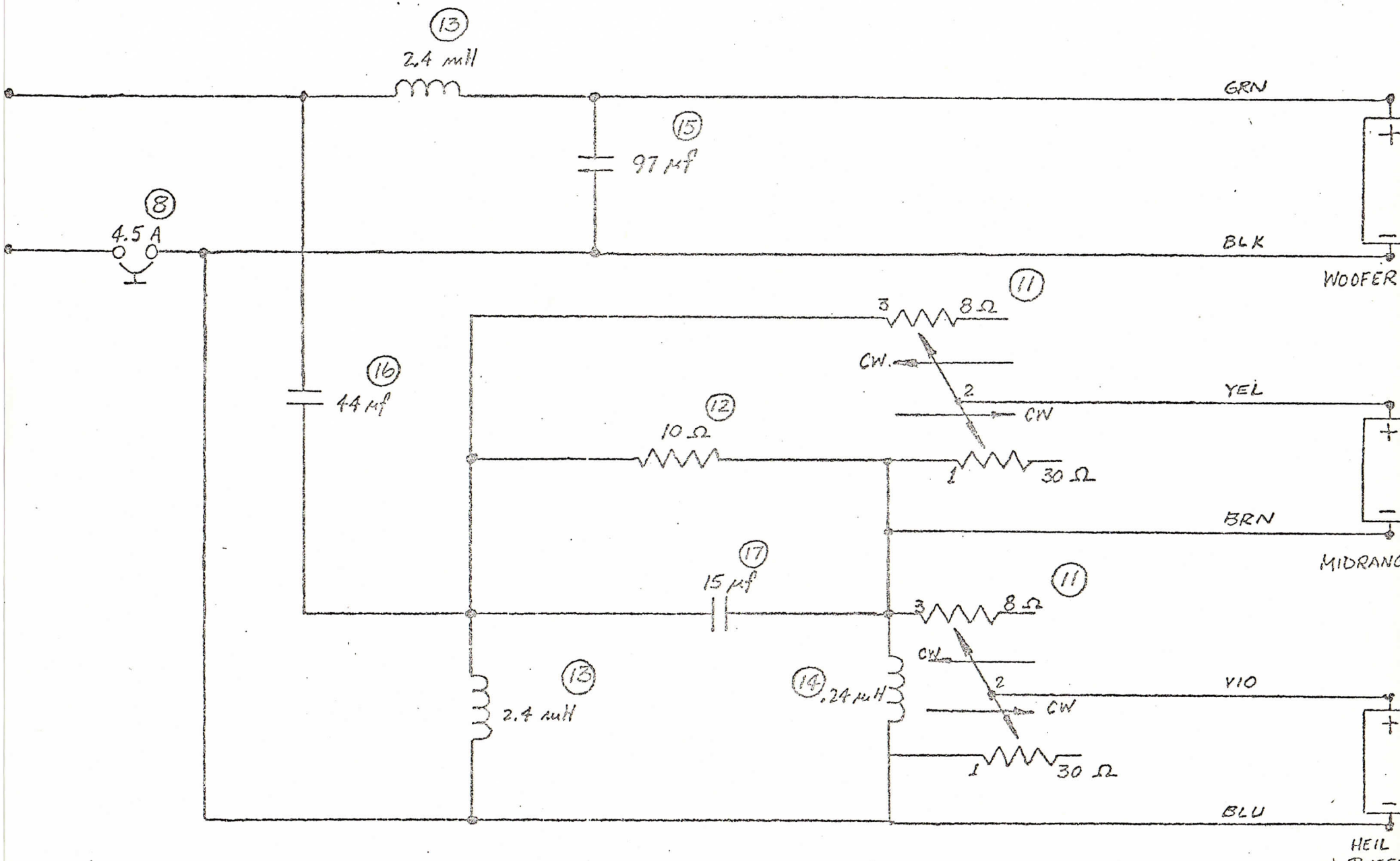


FORTURA SOVEREIGN